VEVOR®

TOUGH TOOLS, HALF PRICE

Technical Support and E-Warranty Certificate www.vevor.com/support

DRAWER SLIDES

MODEL:30201B

We continue to be committed to provide you tools with competitive price.
"Save Half", "Half Price" or any other similar expressions used by us only represents an estimate of savings you might benefit from buying certain tools with us compared to the major top brands and dose not necessarily mean to cover all categories of tools offered by us. You are kindly reminded to verify carefully when you are placing an order with us if you are actually saving half in comparison with the top major brands.

VEVOR®
TOUGH TOOLS, HALF PRICE

DRAWER SLIDES

MODEL:30201B

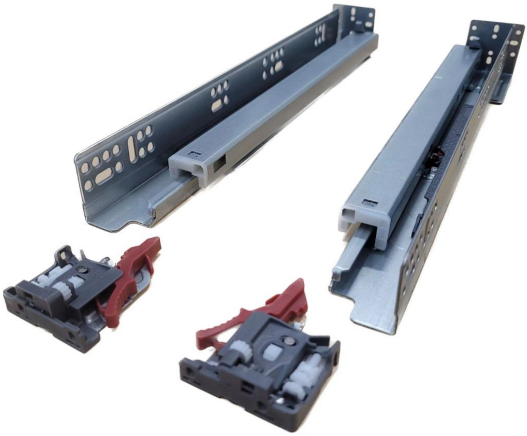

NEED HELP? CONTACT US!

Have product questions? Need technical support? Please feel free to contact us:

Technical Support and E-Warranty Certificate
www.vevor.com/support

This is the original instruction, please read all manual instructions carefully before operating. VEVOR reserves a clear interpretation of our user manual. The appearance of the product shall be subject to the product you received. Please forgive us that we won't inform you again if there are any technology or software updates on our product.

	Warning-To reduce the risk of injury, user must read instructions manual carefully.

WARNING:

1. Please assemble the product in strict accordance with the instructions. Incorrect assembly could be hazardous.
2. Please wear safety goggles and work gloves properly during assembly.
3. Do not try to assemble the product when feeling tired or when under the influence of alcohol, drugs, or medication.
4. Load-bearing capacity and other product parameters are applied to the properly and completely assembled product only.
5. Separate and count all parts and hardware.
6. Prepare the following tool: Philips Head Screwdriver.
7. If using power tools, please be careful to slow down and stop when needed.
8. Two people are required for assembly.
9. Follow the intended uses only.

Save the instructions.

Model	30201B.381-6	30201B.457-6	30201B.533-6	30201B.533-10
Applicable Drawer Length (inch)	15	18	21	21
Sliding Length (mm)	333	408	483	483
Max. Dynamic Load (kg/lbs)	80 / 36.3			
Max. Static Load (kg/lbs)	100 / 45.4			

Part List						
Code	Picture	Name	30201B.381-6	30201B.457-6	30201B.533-6	30201B.533-10
1		Slide	6	6	6	10
2		Handle	6	6	6	10
3		Screws	72	72	72	120

Product Introduction

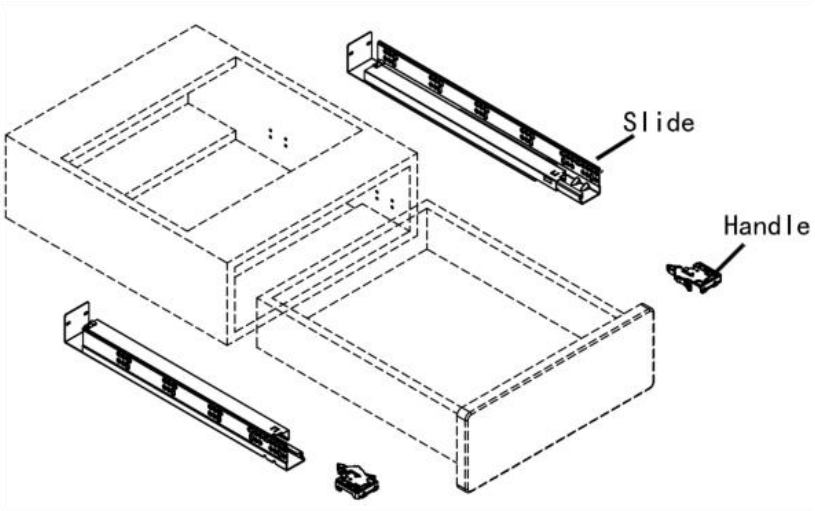

Installation Dimensions (mm)

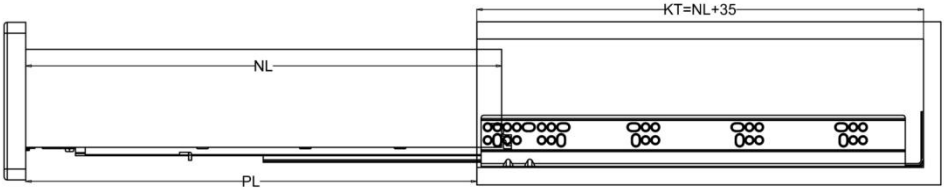

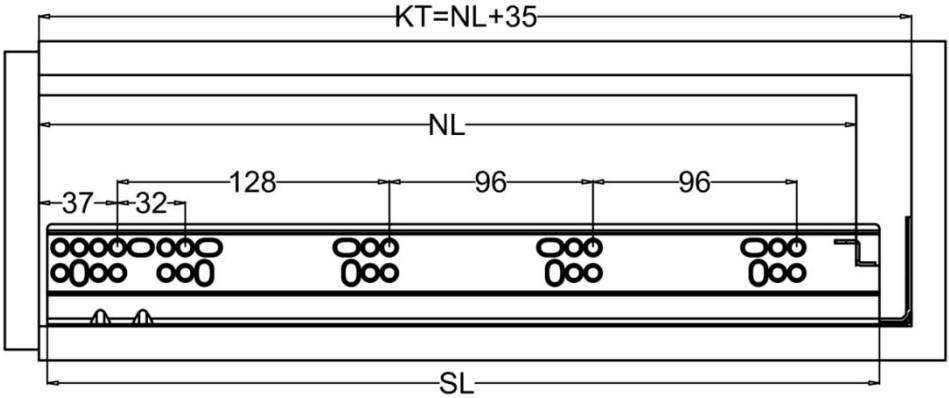

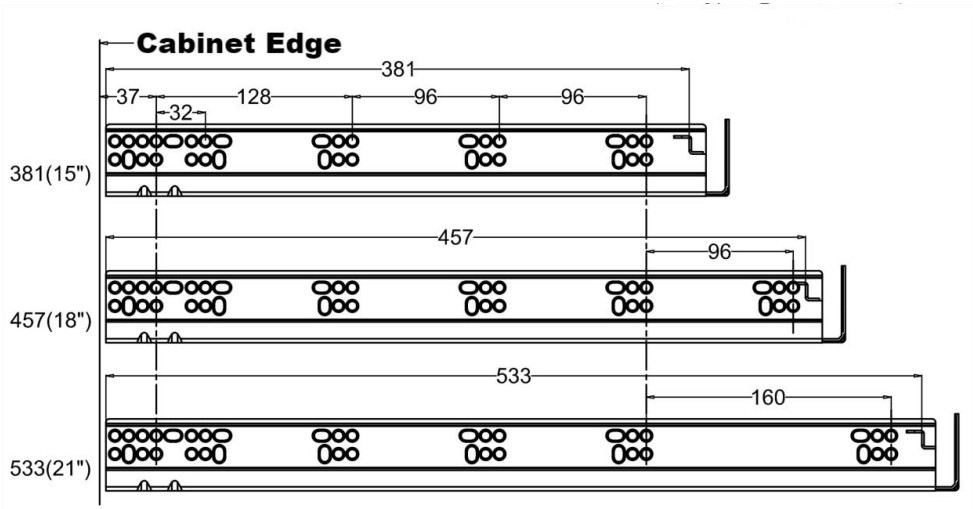

Model	SL(mm)	NL(mm)	KT(mm)
30201B.381-6	392	381	416
30201B.457-6	468	457	492
30201B.533-6	544	533	568
30201B.533-10	544	533	568

- **SL**=Slide Length **NL**=Nominal Slide Length
- **KT**=Min Depth Of Cabinet **PL**=Pull Out The Length

Locking Size & The End Of Slide Size (mm)

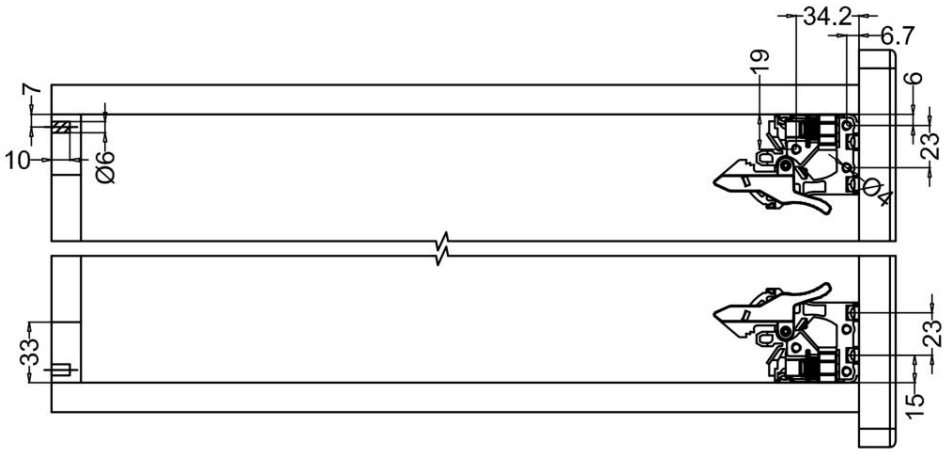

Drawer Installation Dimensions (mm)

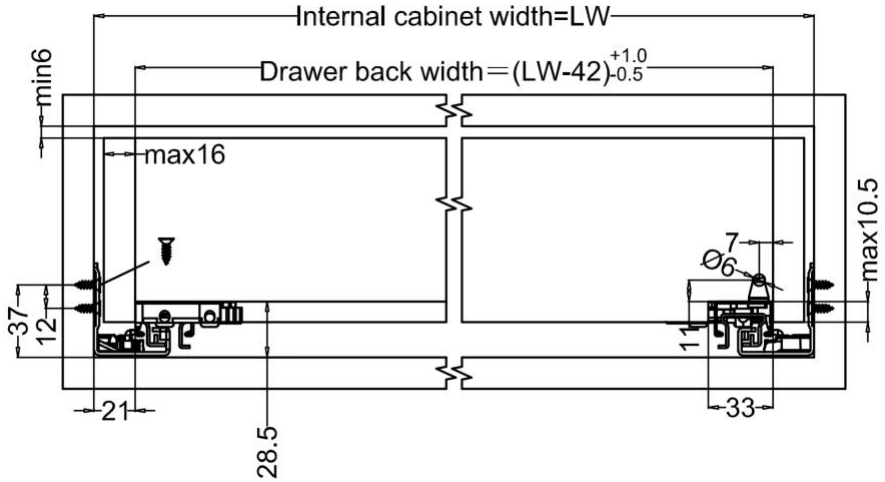

- **LW**=Internal Cabinet Width **NL**=Nominal Slide Length

Installation Procedure

Step1:Slide To Cabinet (mm)

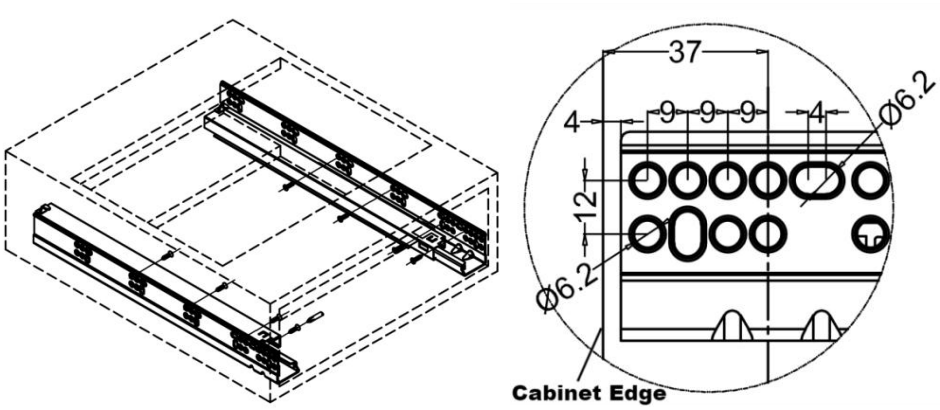

Step2:Locking To Cabinet

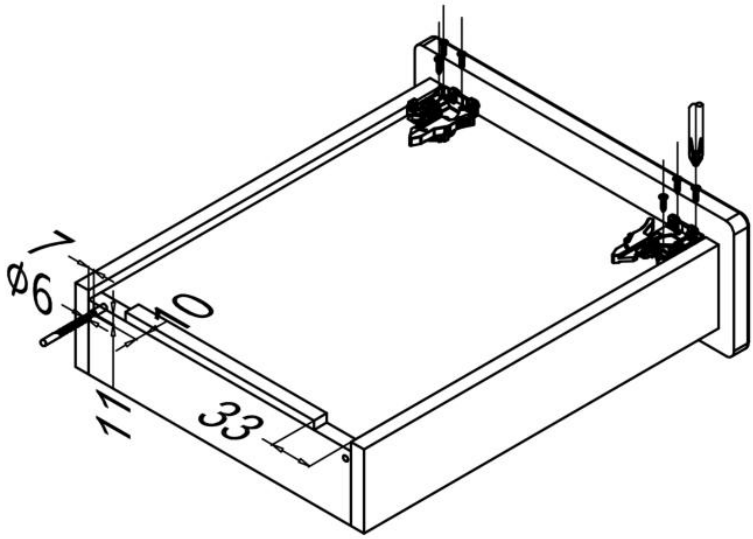

Step3:Adjust Cabinet

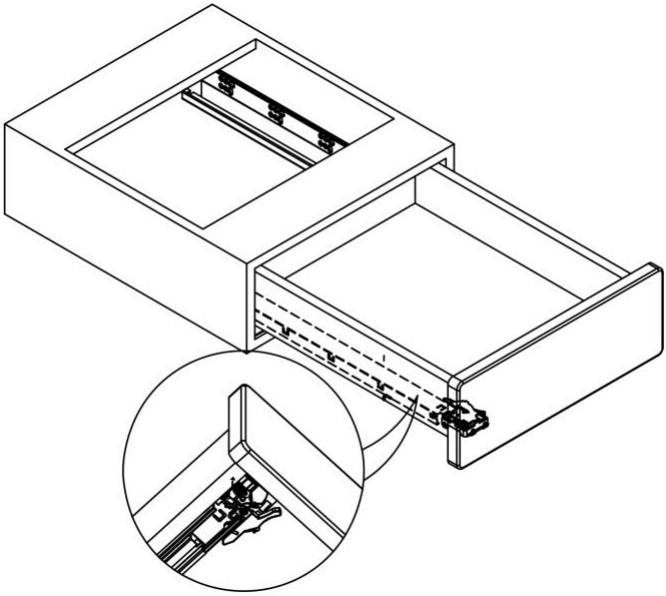

Step4:Disassembly Cabinet

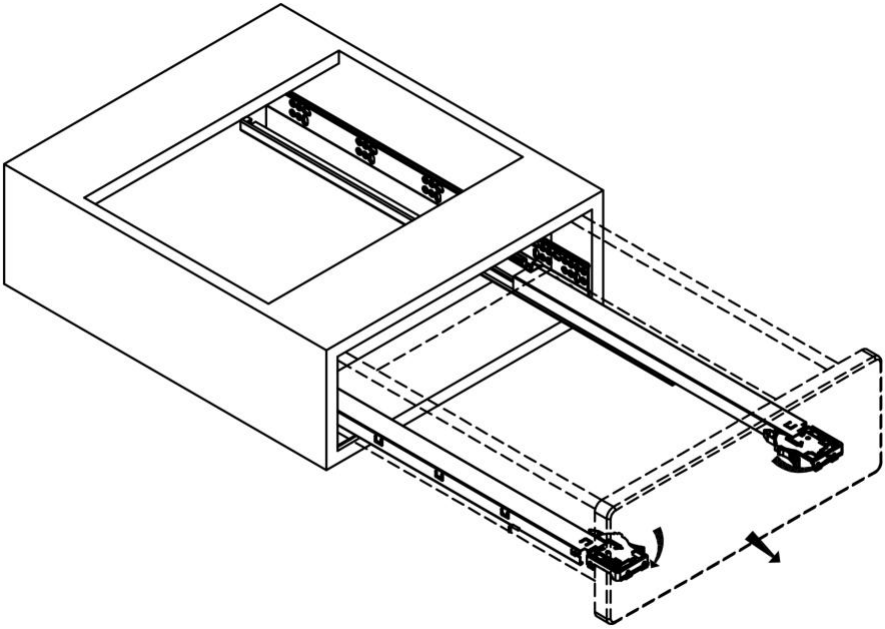

Address： Baoshanqu Shuangchenglu 803long 11hao 1602A-1609shi Shanghai

Imported to AUS: SIHAO PTY LTD.1 ROKEVA STREETEASTWOOD NSW 2122 Australia

Imported to USA: Sanven Technology Ltd. Suite 250, 9166 Anaheim Place, Rancho Cucamonga, CA 91730

UK	**REP**

Pooledas Group Ltd
Unit 5 Albert Edward House, The Pavilions
Preston, United Kingdom

EC	**REP**

SHUNSHUN GmbH
Römeräcker 9 Z2021, 76351
Linkenheim-Hochstetten, Germany

Made In China

VEVOR®

TOUGH TOOLS, HALF PRICE

Technical Support and E-Warranty Certificate

www.vevor.com/support

VEVOR®

TOUGH TOOLS, HALF PRICE

Technique Assistance et certificat de garantie électronique

www.vevor.com/support

GLISSIÈRES DE TIROIR

MODÈLE:30201B

We continue to be committed to provide you tools with competitive price.
"Save Half", "Half Price" or any other similar expressions used by us only represents an estimate of savings you might benefit from buying certain tools with us compared to the major top brands and dose not necessarily mean to cover all categories of tools offered by us. You are kindly reminded to verify carefully when you are placing an order with us if you are actually saving half in comparison with the top major brands.

VEVOR®
TOUGH TOOLS, HALF PRICE

DRAWER SLIDES

MODÈLE:30201B

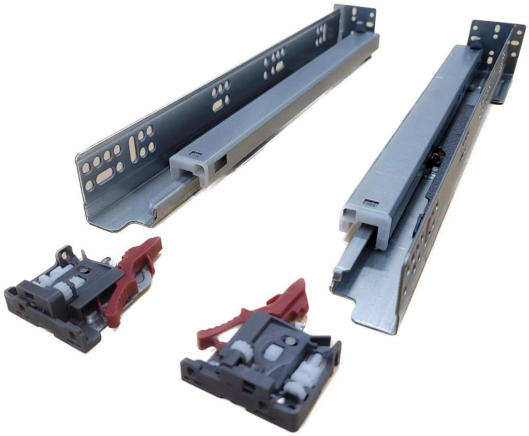

NEED HELP? CONTACT US!

Have product questions? Need technical support? Please feel free to contact us:

Technical Support and E-Warranty Certificate
www.vevor.com/support

This is the original instruction, please read all manual instructions carefully before operating. VEVOR reserves a clear interpretation of our user manual. The appearance of the product shall be subject to the product you received. Please forgive us that we won't inform you again if there are any technology or software updates on our product.

	Avertissement : Pour réduire le risque de blessure, l'utilisateur doit lire attentivement le manuel d'instructions.

AVERTISSEMENT:

1. Veuillez assembler le produit en stricte conformité avec les instructions. Un assemblage incorrect pourrait être dangereux.
2. Veuillez porter correctement des lunettes de sécurité et des gants de travail pendant l'assemblage.
3. N'essayez pas d'assembler le produit lorsque vous vous sentez fatigué ou sous l'influence de l'alcool, de drogues ou de médicaments.
4. La capacité de charge et les autres paramètres du produit sont appliqués uniquement au produit correctement et complètement assemblé.
5. Séparez et comptez toutes les pièces et le matériel.
6. Préparez l'outil suivant : Tournevis cruciforme.
7. Si vous utilisez des outils électriques, veillez à ralentir et à vous arrêter si nécessaire.
8. Deux personnes sont nécessaires pour le montage.
9. Suivez uniquement les utilisations prévues.

Enregistrez les instructions.

Modèle	30201B.381-6	30201B.457-6	30201B.533-6	30201B.533-10
Longueur de tiroir applicable (pouces)	15	18	21	21
Longueur coulissante (mm)	333	408	483	483
Max. Charge dynamique	80 / 36,3			

(kg/lbs)	
Max. Charge statique (kg/lbs)	100 / 45,4

Liste des pièces						
Code	Image	Nom	30201B.381-6	30201B.457-6	30201B.533-6	30201B.533-10
1		Glisser	6	6	6	dix
2		Poignée	6	6	6	dix
3		Des vis	72	72	72	120

Présentation du produit

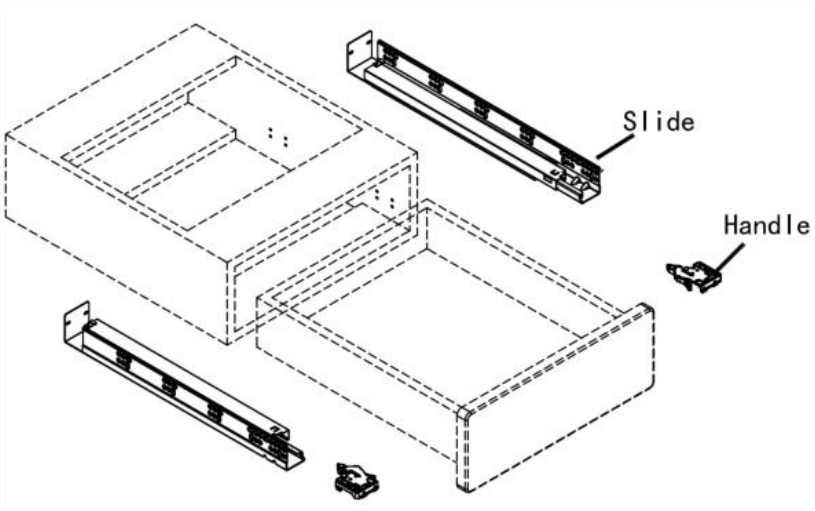

Dimensions d'installation (mm)

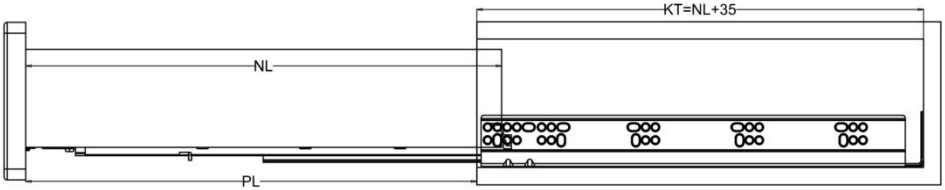

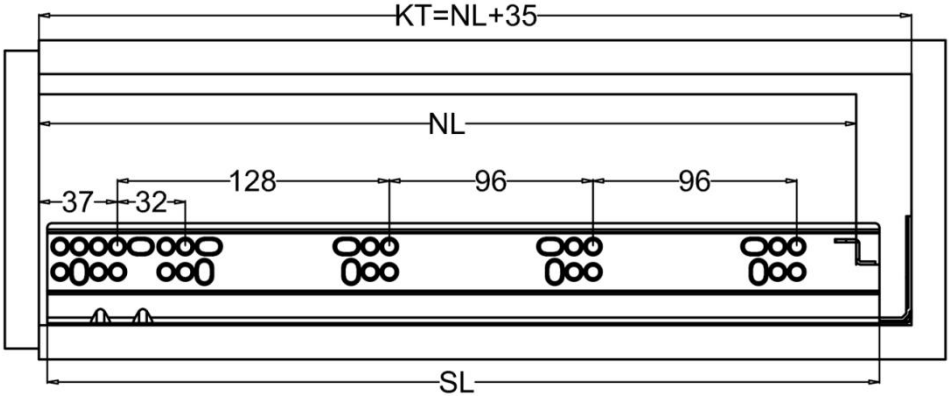

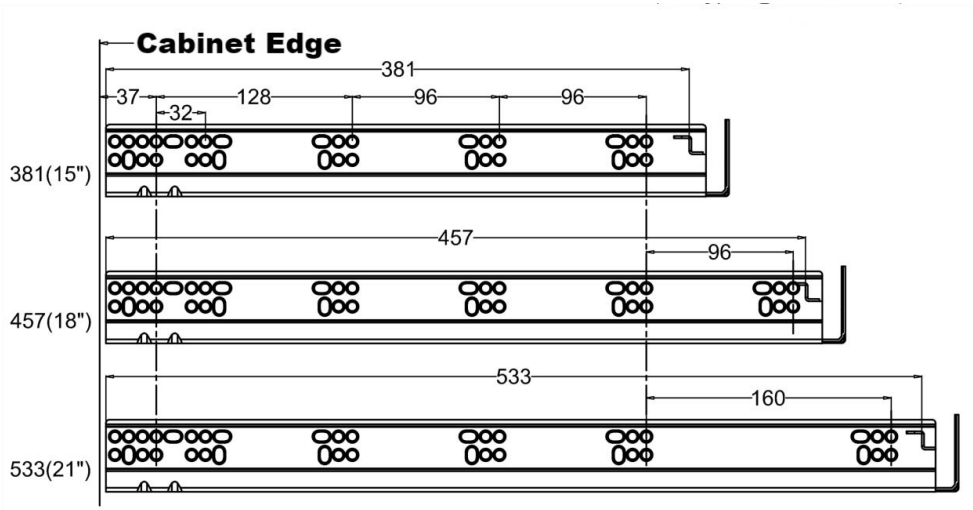

Modèle	SL(mm)	NL(mm)	KT(mm)
30201B.381-6	392	381	416
30201B.457-6	468	457	492

30201B.533-6	544	533	568
30201B.533-10	544	533	568

- **SL** = Longueur du coulisseau **NL** = Longueur nominale du coulisseau
- **KT** = Profondeur minimale du meuble **PL** = Tirez sur la longueur

Taille de verrouillage et taille de la fin de la diapositive (mm)

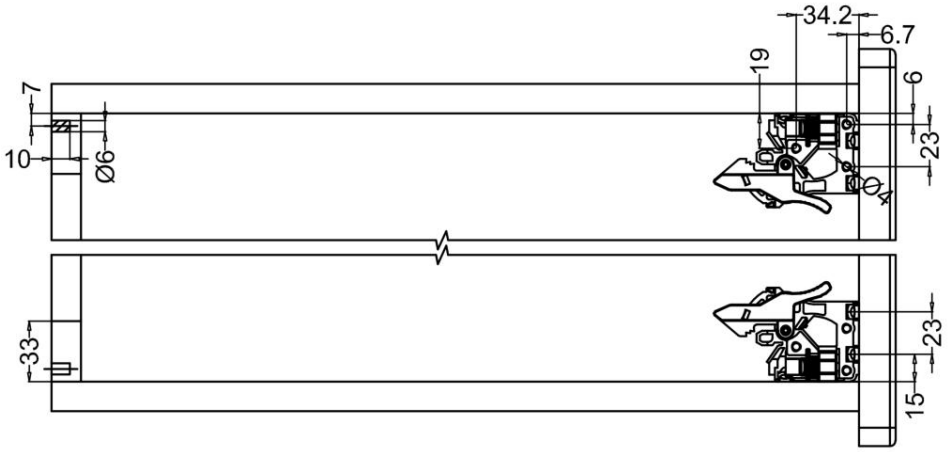

D imension d' installation du tiroir (mm)

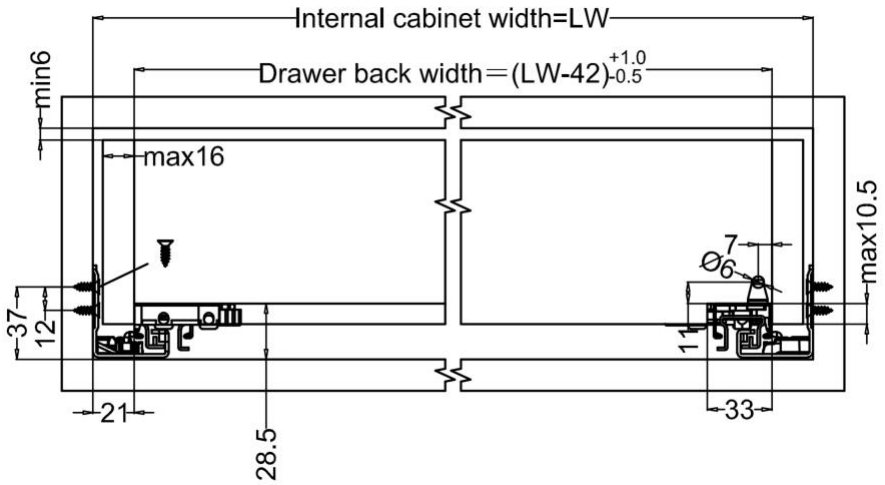

- **LW** = Largeur interne de l'armoire **NL** = Longueur nominale de la glissière

P rocédure d'installation

Étape 1 : Glisser vers l'armoire (mm)

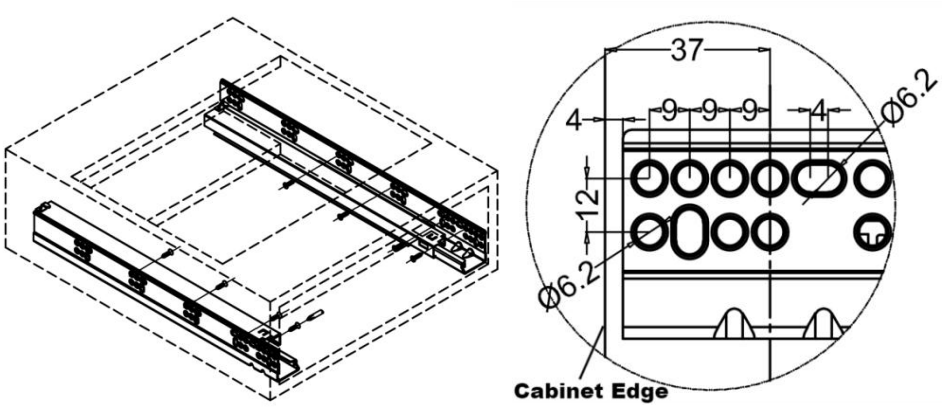

Étape 2 : Verrouillage à l'armoire

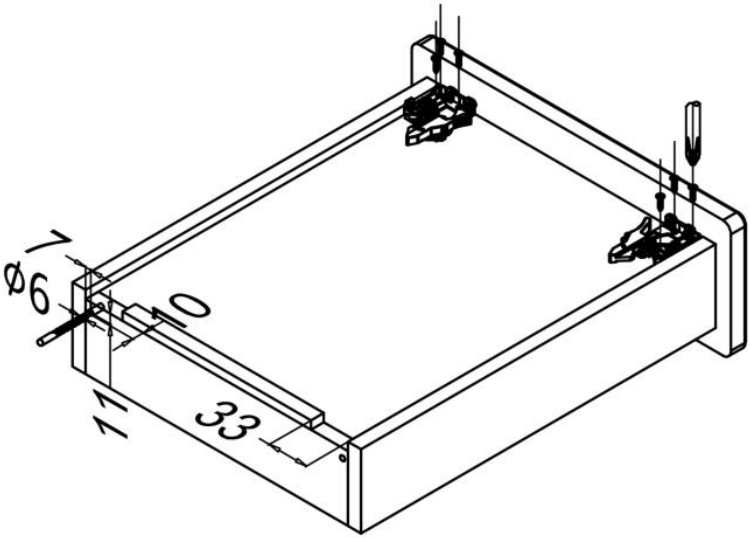

Étape 3 : Ajuster l'armoire

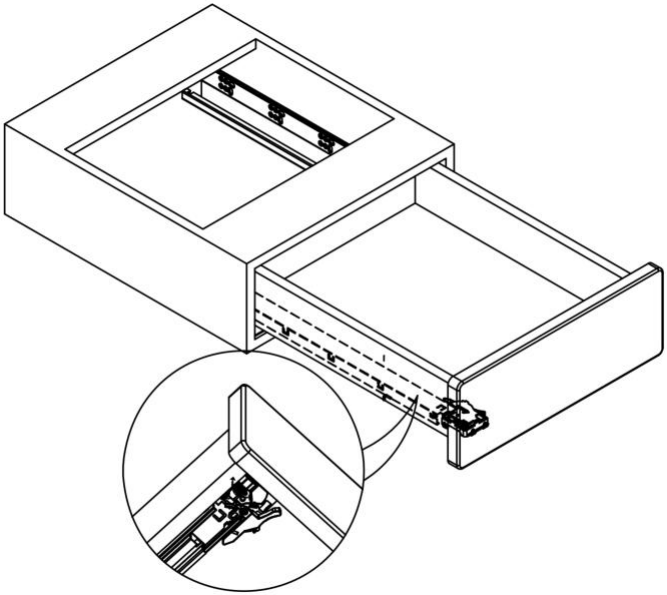

Étape 4 : Démontage de l'armoire

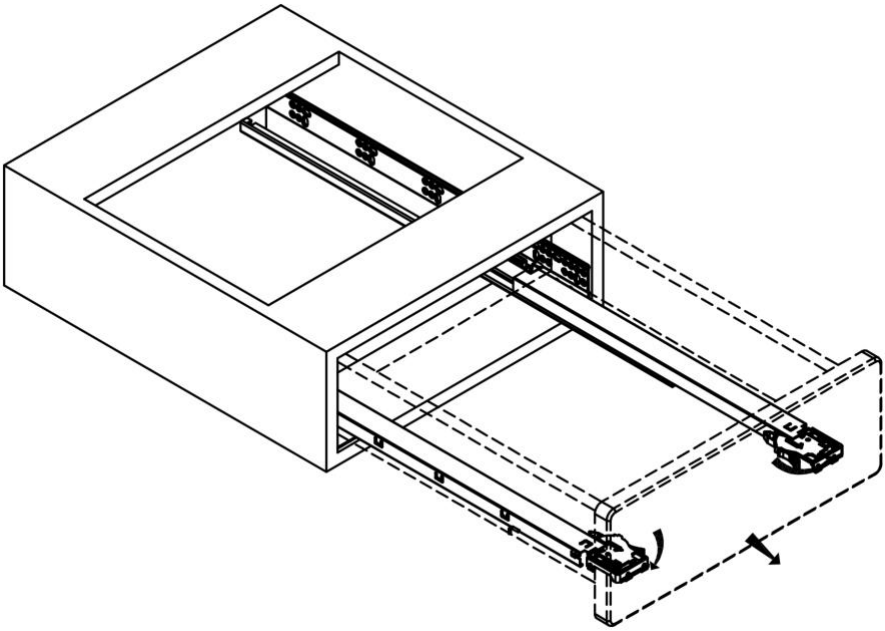

Adresse : Baoshanqu Shuangchenglu 803long 11hao 1602A-1609shi Shanghai

Importé en Australie : SIHAO PTY LTD . 1 ROKEVA STREETASTWOOD NSW 2122 Australie

Importé aux États-Unis : Sanven Technology Ltd. Bureau 250, 9166 Anaheim Place, Rancho Cucamonga, CA 91730

UK	REP

Pooledas Group Ltd
Unit 5 Albert Edward House, The Pavilions
Preston, United Kingdom

EC	REP

SHUNSHUN GmbH
Römeräcker 9 Z2021, 76351
Linkenheim-Hochstetten, Germany

Fabriqué en Chine

VEVOR®

TOUGH TOOLS, HALF PRICE

Technique Assistance et certificat de garantie électronique

www.vevor.com/support

VEVOR®

TOUGH TOOLS, HALF PRICE

Technisch Support- und E-Garantie-Zertifikat www.vevor.com/support

SCHUBLADENFÜHRUNGEN

MODELL:30201B

We continue to be committed to provide you tools with competitive price.
"Save Half", "Half Price" or any other similar expressions used by us only represents an estimate of savings you might benefit from buying certain tools with us compared to the major top brands and dose not necessarily mean to cover all categories of tools offered by us. You are kindly reminded to verify carefully when you are placing an order with us if you are actually saving half in comparison with the top major brands.

VEVOR®
TOUGH TOOLS, HALF PRICE

DRAWER SLIDES

MODELL:30201B

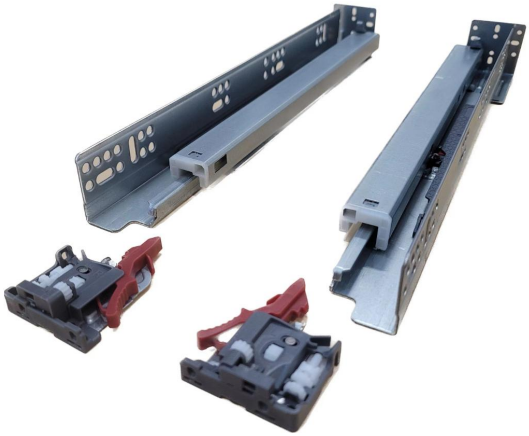

NEED HELP? CONTACT US!

Have product questions? Need technical support? Please feel free to contact us:

Technical Support and E-Warranty Certificate
www.vevor.com/support

This is the original instruction, please read all manual instructions carefully before operating. VEVOR reserves a clear interpretation of our user manual. The appearance of the product shall be subject to the product you received. Please forgive us that we won't inform you again if there are any technology or software updates on our product.

	Warnung: Um das Verletzungsrisiko zu verringern, muss der Benutzer die Bedienungsanleitung sorgfältig lesen.

WARNUNG:

1. Bitte bauen Sie das Produkt unter strikter Einhaltung der Anweisungen zusammen. Eine falsche Montage kann gefährlich sein.
2. Bitte tragen Sie bei der Montage ordnungsgemäß eine Schutzbrille und Arbeitshandschuhe.
3. Versuchen Sie nicht, das Produkt zusammenzubauen, wenn Sie sich müde fühlen oder unter dem Einfluss von Alkohol, Drogen oder Medikamenten stehen.
4. Tragfähigkeit und sonstige Produktparameter beziehen sich ausschließlich auf das ordnungsgemäß und vollständig montierte Produkt.
5. Trennen und zählen Sie alle Teile und Hardware.
6. Bereiten Sie das folgende Werkzeug vor: Kreuzschlitzschraubendreher.
7. Wenn Sie Elektrowerkzeuge verwenden, achten Sie bitte darauf, langsamer zu fahren und bei Bedarf anzuhalten.
8. Für den Aufbau sind zwei Personen erforderlich.
9. Befolgen Sie nur die vorgesehenen Verwendungszwecke.

Bewahren Sie die Anweisungen auf.

Modell	30201B.381-6	30201B.457-6	30201B.533-6	30201B.533-10
Anwendbare Schubladenlänge (Zoll)	15	18	21	21
Gleitlänge (mm)	333	408	483	483
Max. Dynamische Belastung	80 / 36,3			

(kg/lbs)	
Max. Statische Belastung (kg/lbs)	100 / 45,4

Stückliste						
Code	Bild	Name	30201B.381-6	30201B.457-6	30201B.533-6	30201B.533-10
1		Gleiten	6	6	6	10
2		Handhaben	6	6	6	10
3		Schrauben	72	72	72	120

Produkteinführung

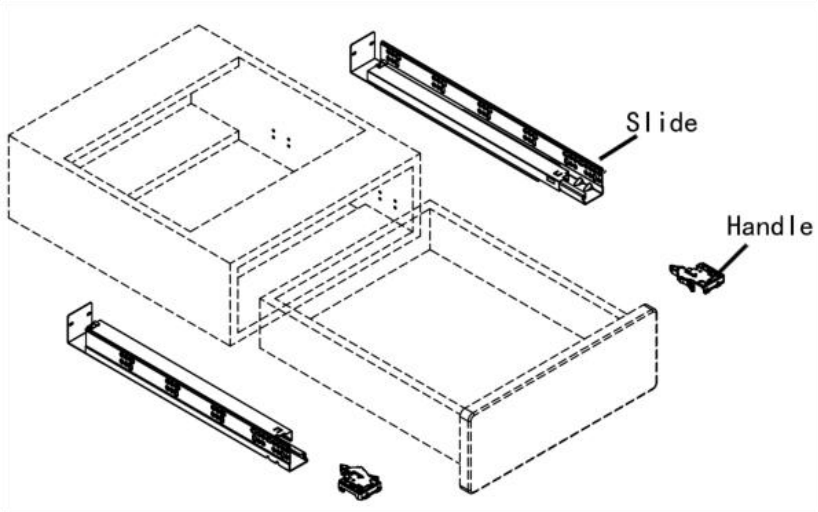

Einbaumaße (mm)

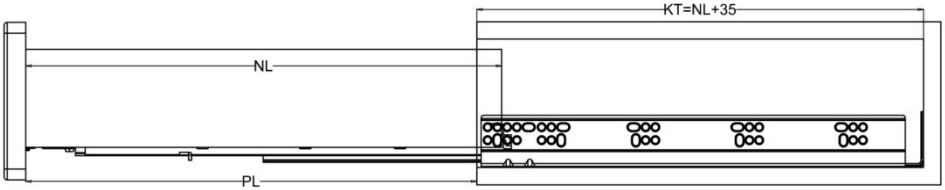

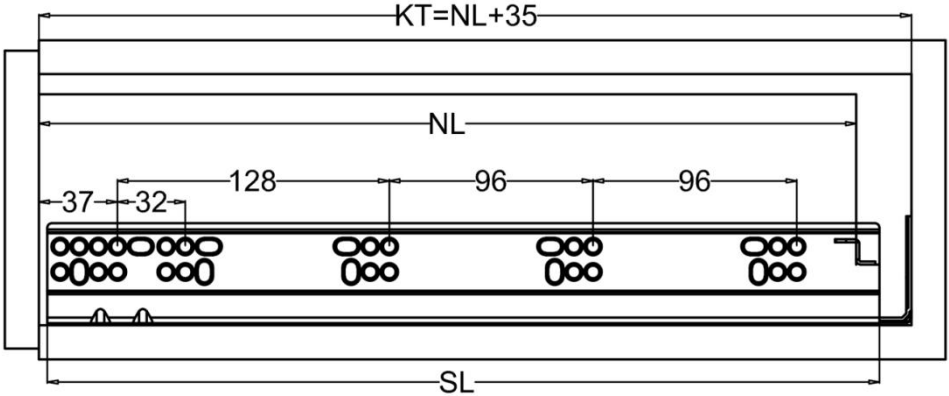

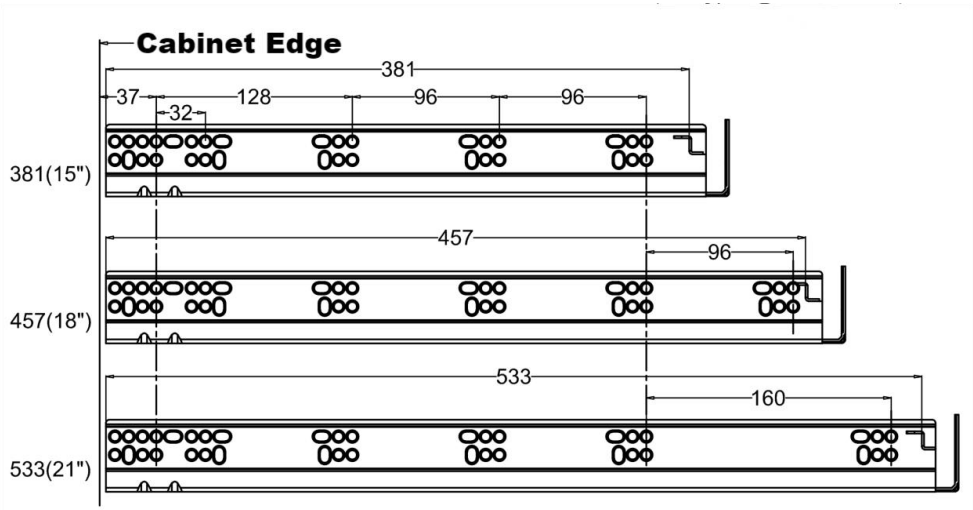

Modell	SL(mm)	NL(mm)	KT(mm)
30201B.381-6	392	381	416
30201B.457-6	468	457	492

30201B.533-6	544	533	568
30201B.533-10	544	533	568

- **SL** = Schlittenlänge **NL** = Nominale Schlittenlänge
- **KT** =Mindesttiefe des Schranks **PL** =Länge herausziehen

Verriegelungsgröße und Endgröße des Schiebers (mm)

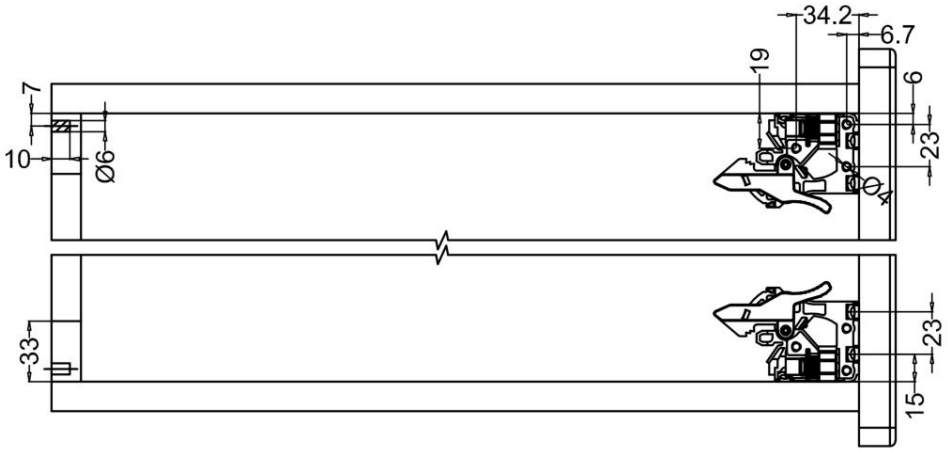

Schubladeneinbaumaße (mm) _

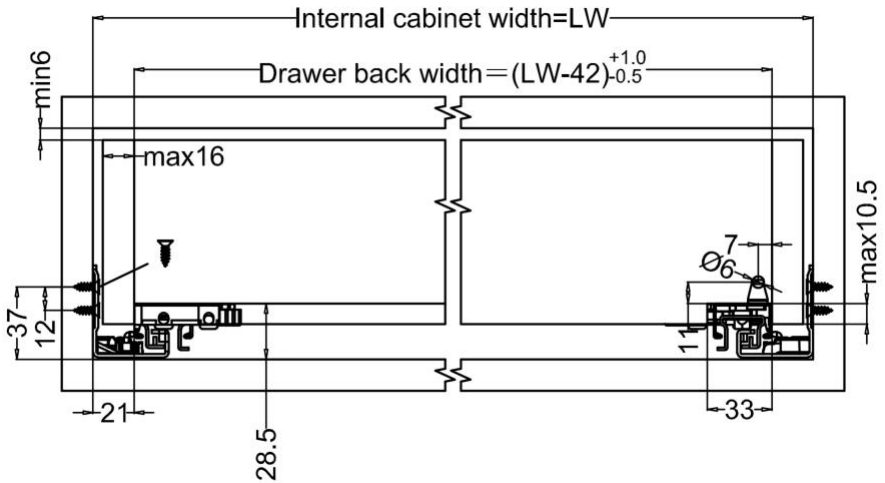

- **LW** =Innenbreite des Schranks **NL** =Nennlänge der Schiene

Installationsvorgang _ _

Schritt 1: Zum Schrank schieben (mm)

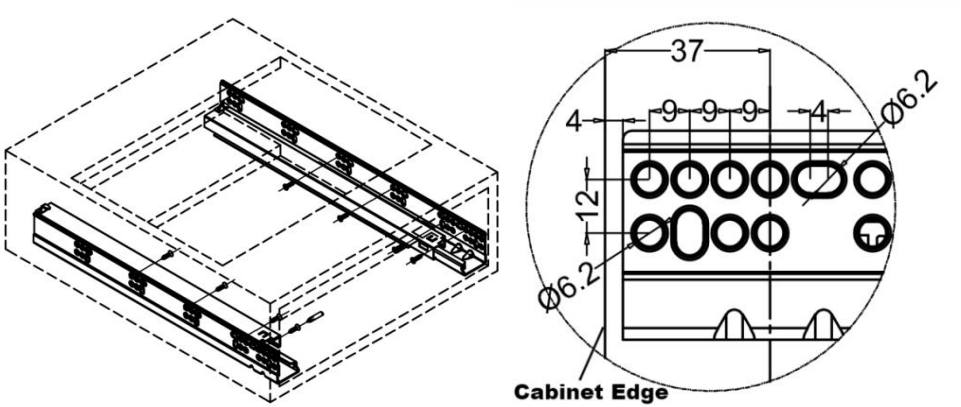

Schritt 2: Am Schrank befestigen

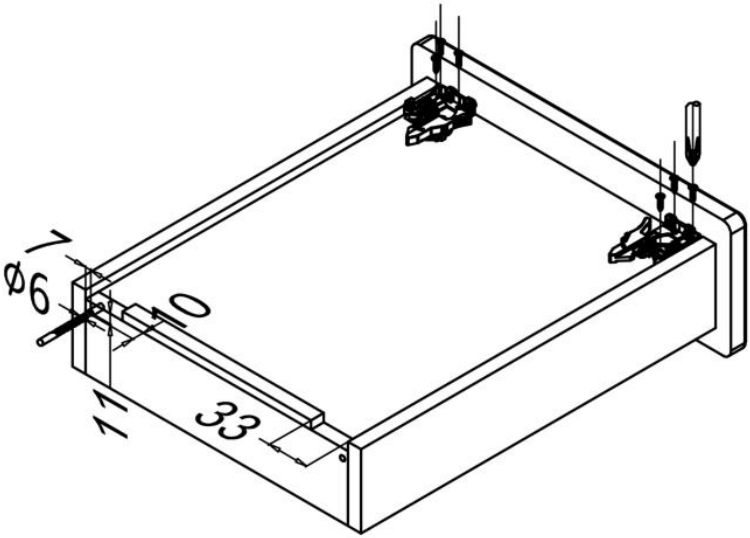

Schritt 3: Schrank anpassen

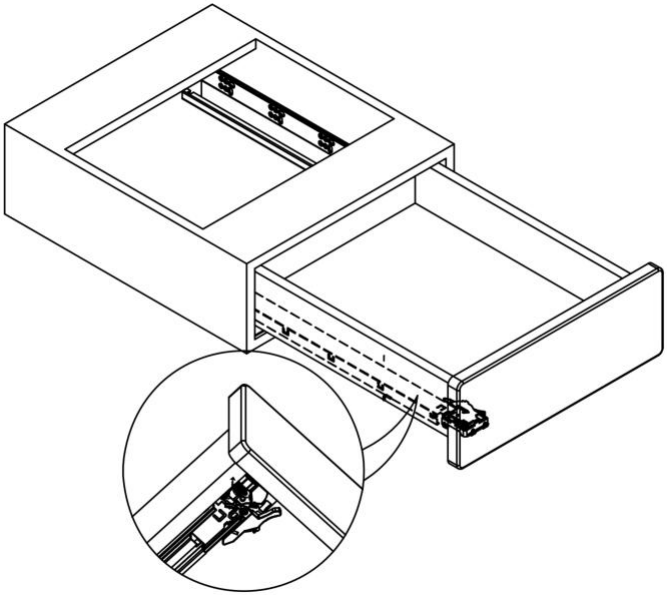

Schritt 4: Schrank zerlegen

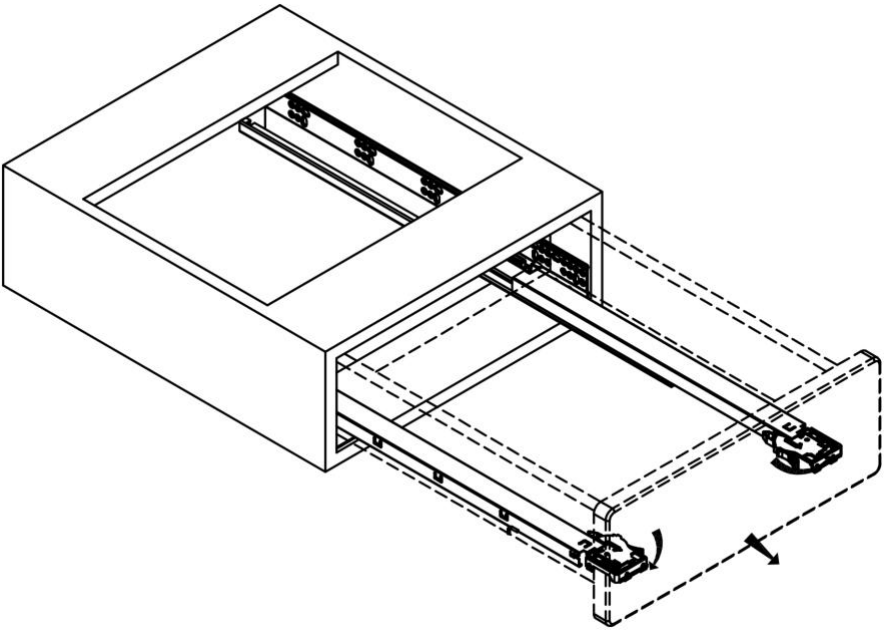

Adresse: Baoshanqu Shuangchenglu 803long 11hao 1602A-1609shi Shanghai

Importiert nach AUS: SIHAO PTY LTD . 1 ROKEVA STREETEASTWOOD NSW 2122 Australien

Importiert in die USA: Sanven Technology Ltd. Suite 250, 9166 Anaheim Place, Rancho Cucamonga, CA 91730

UK	REP

Pooledas Group Ltd
Unit 5 Albert Edward House, The Pavilions
Preston, United Kingdom

EC	REP

SHUNSHUN GmbH
Römeräcker 9 Z2021, 76351
Linkenheim-Hochstetten, Germany

In China hergestellt

VEVOR®

TOUGH TOOLS, HALF PRICE

Technisch Support- und E-Garantiezertifikat

www.vevor.com/support

VEVOR®

TOUGH TOOLS, HALF PRICE

Tecnico Supporto e certificato di garanzia elettronica www.vevor.com/support

GUIDE PER CASSETTI

MODELLO:30201B

We continue to be committed to provide you tools with competitive price.
"Save Half", "Half Price" or any other similar expressions used by us only represents an estimate of savings you might benefit from buying certain tools with us compared to the major top brands and dose not necessarily mean to cover all categories of tools offered by us. You are kindly reminded to verify carefully when you are placing an order with us if you are actually saving half in comparison with the top major brands.

VEVOR®
TOUGH TOOLS, HALF PRICE

DRAWER SLIDES

MODELLO:30201B

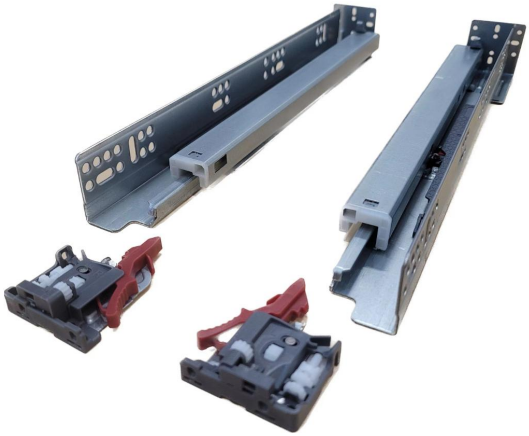

NEED HELP? CONTACT US!

Have product questions? Need technical support? Please feel free to contact us:

Technical Support and E-Warranty Certificate
www.vevor.com/support

This is the original instruction, please read all manual instructions carefully before operating. VEVOR reserves a clear interpretation of our user manual. The appearance of the product shall be subject to the product you received. Please forgive us that we won't inform you again if there are any technology or software updates on our product.

	Avvertenza: per ridurre il rischio di lesioni, l'utente deve leggere attentamente il manuale di istruzioni.

AVVERTIMENTO:

1. Si prega di assemblare il prodotto attenendosi rigorosamente alle istruzioni. Un montaggio errato potrebbe essere pericoloso.
2. Indossare correttamente occhiali protettivi e guanti da lavoro durante il montaggio.
3. Non tentare di montare il prodotto quando ci si sente stanchi o sotto l'influenza di alcol, droghe o farmaci.
4. La capacità di carico e altri parametri del prodotto si applicano solo al prodotto correttamente e completamente assemblato.
5. Separare e contare tutte le parti e l'hardware.
6. Preparare il seguente strumento: cacciavite a croce.
7. Se si utilizzano utensili elettrici, fare attenzione a rallentare e fermarsi quando necessario.
8. Per il montaggio sono necessarie due persone.
9. Seguire solo gli usi previsti.

Salva le istruzioni.

Modello	30201B.381-6	30201B.457-6	30201B.533-6	30201B.533-10
Lunghezza cassetto applicabile (pollici)	15	18	21	21
Lunghezza scorrevole (mm)	333	408	483	483
Massimo. Carico	80/36.3			

dinamico (kg/libbre)	
Massimo. Carico statico (kg/libbre)	100/45.4

Elenco delle parti						
Codice	Immagine	Nome	30201B.381-6	30201B.457-6	30201B.533-6	30201B.533-10
1		Diapositiva	6	6	6	10
2		Maniglia	6	6	6	10
3		Viti	72	72	72	120

introduzione al prodotto

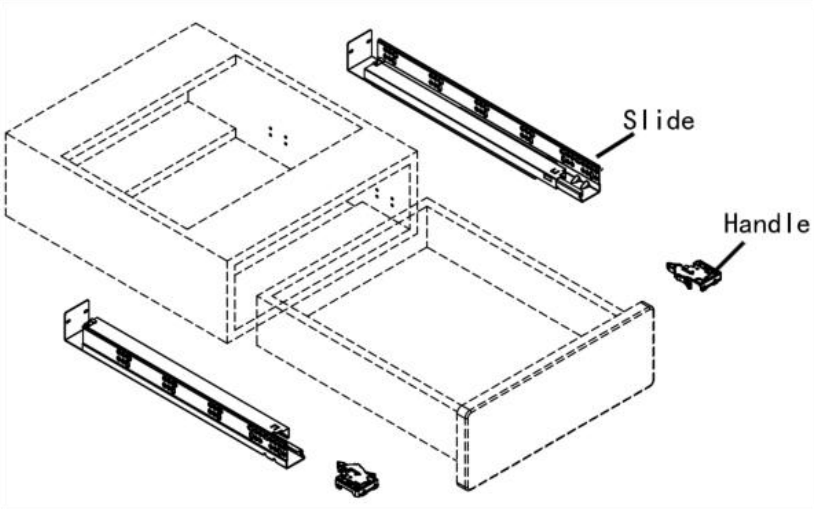

Dimensioni di installazione (mm)

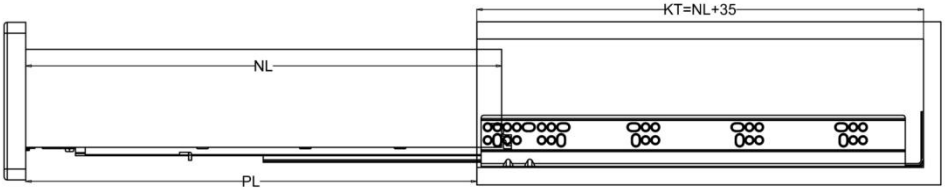

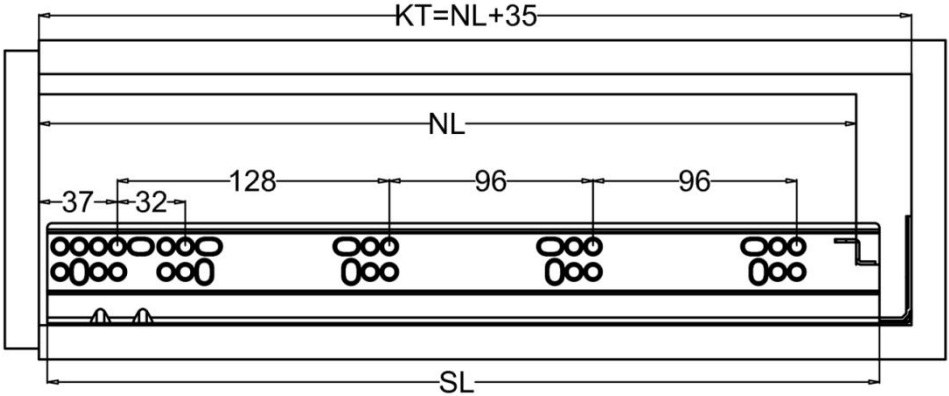

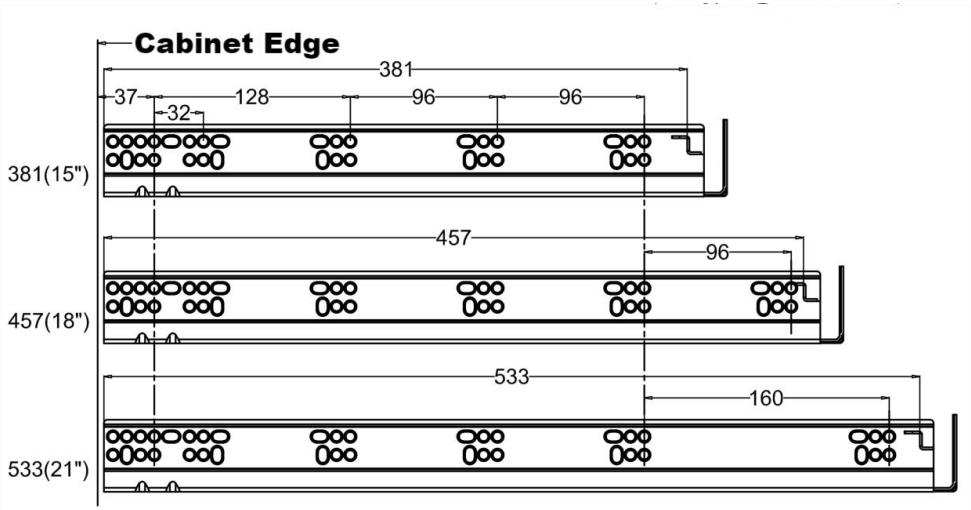

Modello	SL(mm)	NL(mm)	KT(mm)
30201B.381-6	392	381	416
30201B.457-6	468	457	492

30201B.533-6	544	533	568
30201B.533-10	544	533	568

- **SL** =Lunghezza guida **NL** =Lunghezza nominale guida
- **KT** = Profondità minima del mobile **PL** = Estrarre la lunghezza

Dimensioni di bloccaggio e dimensioni dell'estremità della diapositiva (mm)

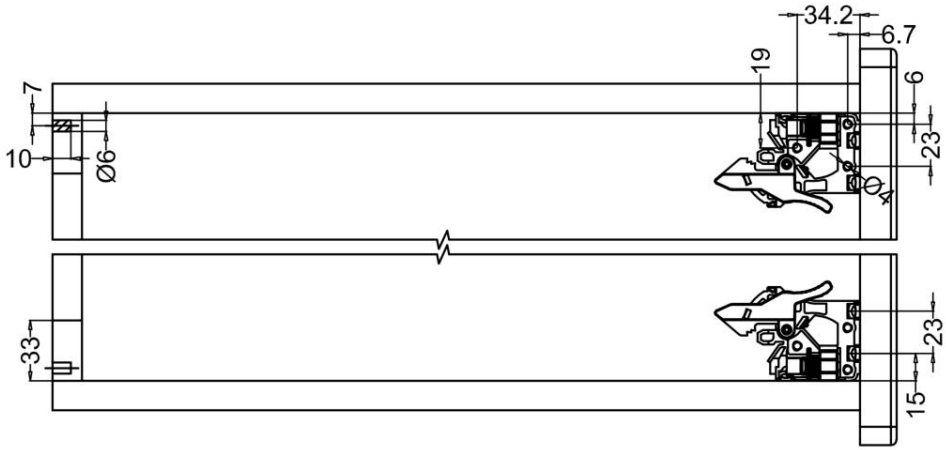

D imensioni di installazione del cassetto (mm)

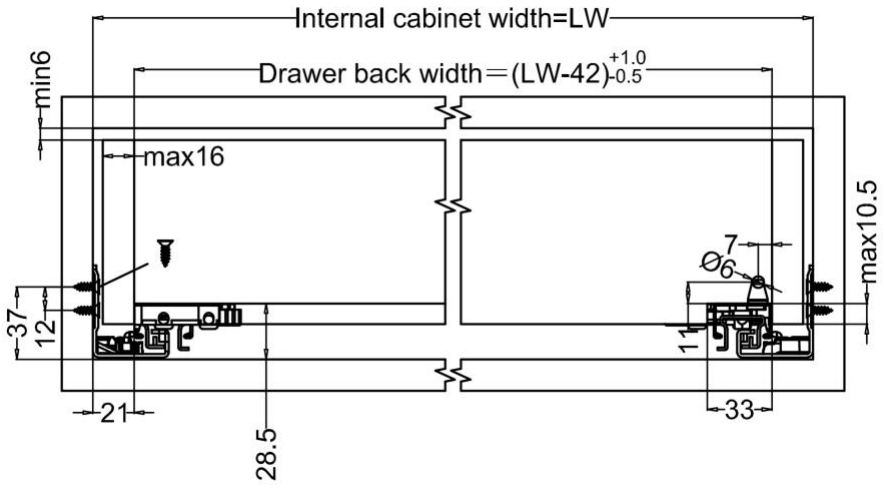

- **LW** = Larghezza interna del mobile **NL** = Lunghezza nominale della guida

Procedura di installazione

Passaggio 1: scorrere nell'armadietto (mm)

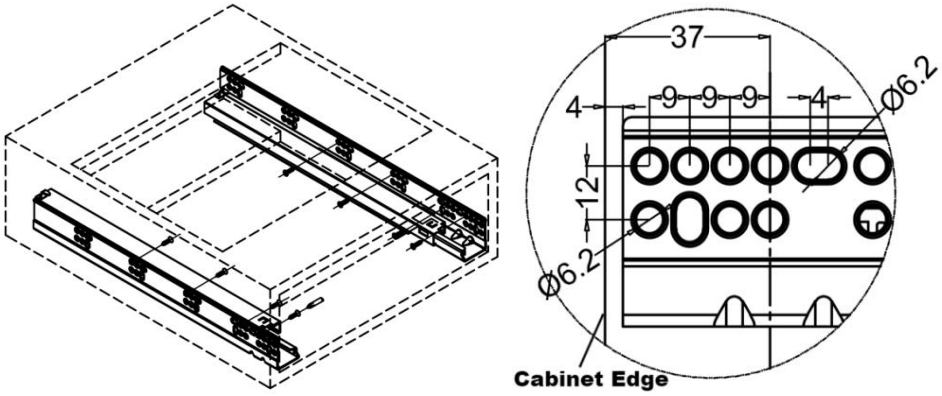

Passaggio 2: blocco dell'armadietto

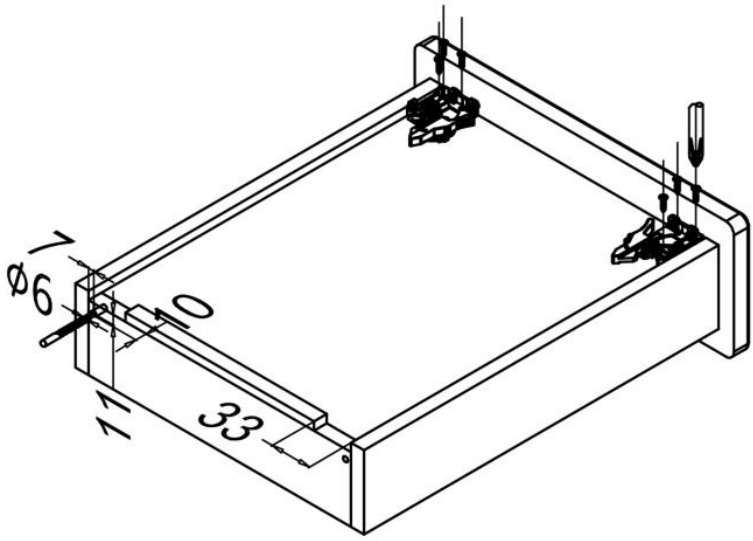

Passaggio 3: regolare il mobile

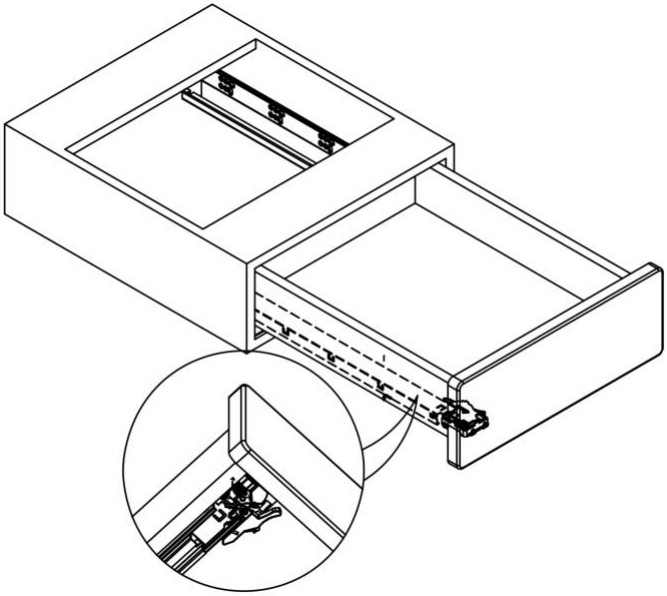

Passaggio 4: armadio per lo smontaggio

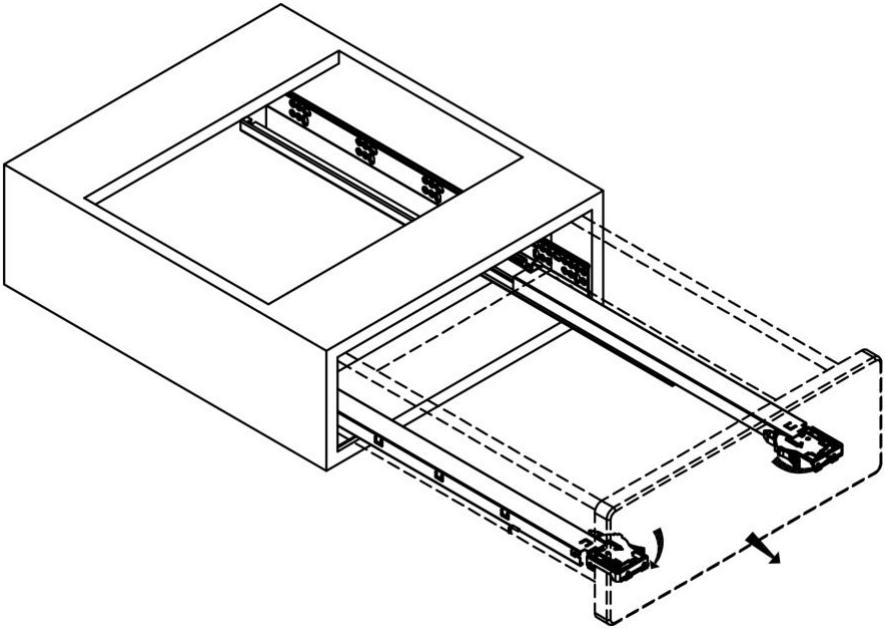

Indirizzo: Baoshanqu Shuangchenglu 803long 11hao 1602A-1609shi Shanghai
Importato in AUS: SIHAO PTY LTD . 1 ROKEVA STREETEASTWOOD NSW 2122 Australia
Importato negli Stati Uniti: Sanven Technology Ltd. Suite 250, 9166 Anaheim Place, Rancho Cucamonga, CA 91730

UK	REP

Pooledas Group Ltd
Unit 5 Albert Edward House, The Pavilions
Preston, United Kingdom

EC	REP

SHUNSHUN GmbH
Römeräcker 9 Z2021, 76351
Linkenheim-Hochstetten, Germany

Made in China

VEVOR®

TOUGH TOOLS, HALF PRICE

Tecnico Supporto e certificato di garanzia elettronica

www.vevor.com/support

VEVOR®

TOUGH TOOLS, HALF PRICE

Técnico Soporte y certificado de garantía electrónica www.vevor.com/support

GUÍAS PARA CAJONES

MODELO: 30201B

We continue to be committed to provide you tools with competitive price.
"Save Half", "Half Price" or any other similar expressions used by us only represents an estimate of savings you might benefit from buying certain tools with us compared to the major top brands and dose not necessarily mean to cover all categories of tools offered by us. You are kindly reminded to verify carefully when you are placing an order with us if you are actually saving half in comparison with the top major brands.

VEVOR®
TOUGH TOOLS, HALF PRICE

DRAWER SLIDES

MODELO: 30201B

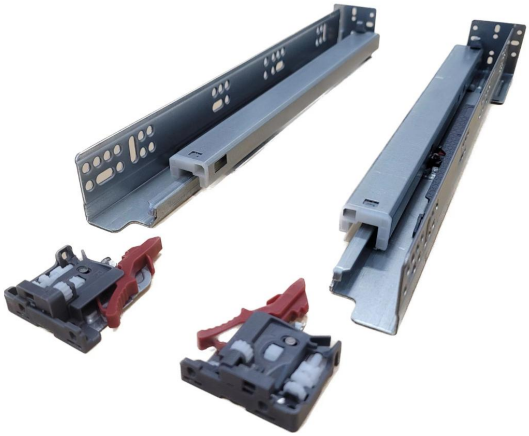

NEED HELP? CONTACT US!

Have product questions? Need technical support? Please feel free to contact us:

Technical Support and E-Warranty Certificate
www.vevor.com/support

This is the original instruction, please read all manual instructions carefully before operating. VEVOR reserves a clear interpretation of our user manual. The appearance of the product shall be subject to the product you received. Please forgive us that we won't inform you again if there are any technology or software updates on our product.

	Advertencia: para reducir el riesgo de lesiones, el usuario debe leer atentamente el manual de instrucciones.

ADVERTENCIA:

1. Ensamble el producto estrictamente de acuerdo con las instrucciones. El montaje incorrecto podría ser peligroso.
2. Utilice gafas de seguridad y guantes de trabajo correctamente durante el montaje.
3. No intente montar el producto cuando se sienta cansado o bajo la influencia del alcohol, drogas o medicamentos.
4. La capacidad de carga y otros parámetros del producto se aplican únicamente al producto ensamblado de manera adecuada y completa.
5. Separe y cuente todas las piezas y herrajes.
6. Prepare la siguiente herramienta: Destornillador Philips.
7. Si utiliza herramientas eléctricas, tenga cuidado de reducir la velocidad y detenerse cuando sea necesario.
8. Para el montaje se necesitan dos personas.
9. Siga únicamente los usos previstos.

Guarde las instrucciones.

Modelo	30201B.381-6	30201B.457-6	30201B.533-6	30201B.533-10
Longitud aplicable del cajón (pulgadas)	15	18	21	21
Longitud de deslizamiento (mm)	333	408	483	483
Máx. Carga dinámica	80 / 36,3			

(kg/lbs)	
Máx. Carga estática (kg/lbs)	100 / 45,4

Lista de						
Código	Imagen	Nombre	30201B.381-6	30201B.457-6	30201B.533-6	30201B.533-10
1		Deslizar	6	6	6	10
2		Manejar	6	6	6	10
3		Tornillos	72	72	72	120

Introducción del producto

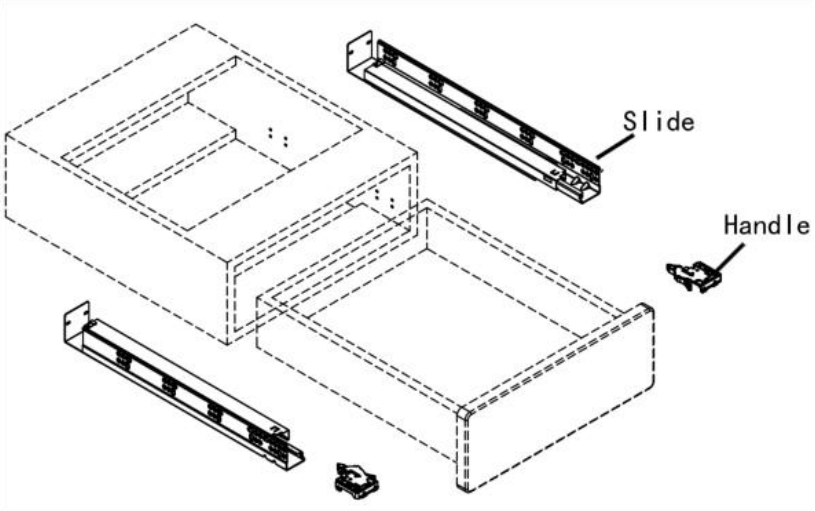

Dimensiones de instalación (mm)

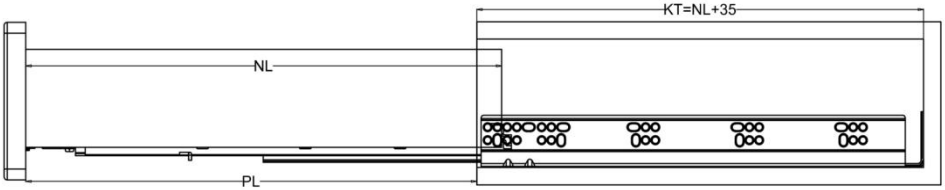

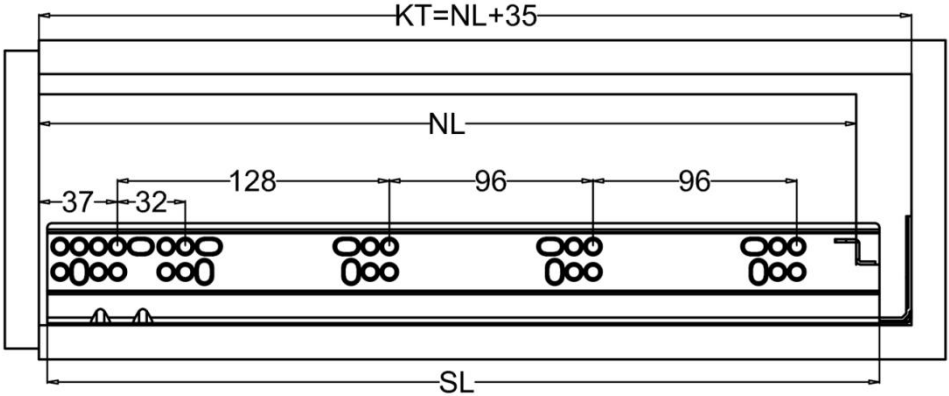

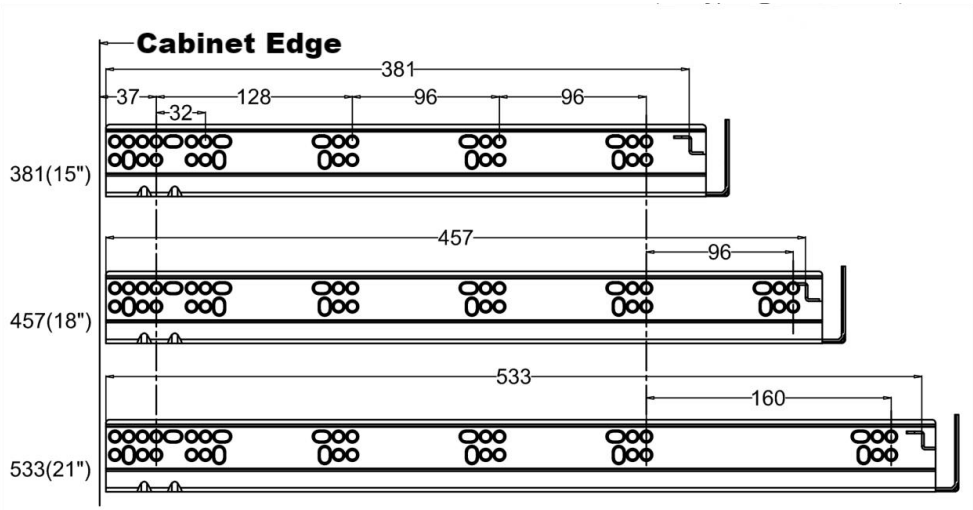

Modelo	SL (milímetros)	NL(mm)	CT(mm)
30201B.381-6	392	381	416

30201B.457-6	468	457	492
30201B.533-6	544	533	568
30201B.533-10	544	533	568

- **SL** =Longitud del portaobjetos **NL** =Longitud nominal del portaobjetos
- **KT** = Profundidad mínima del gabinete **PL** = Extraiga la longitud

Tamaño de bloqueo y tamaño del final de la diapositiva (mm)

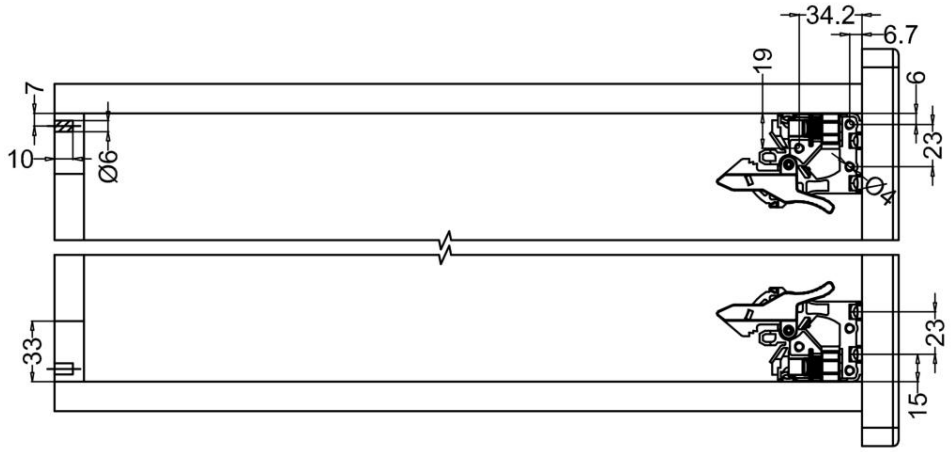

de instalación del cajón (mm)

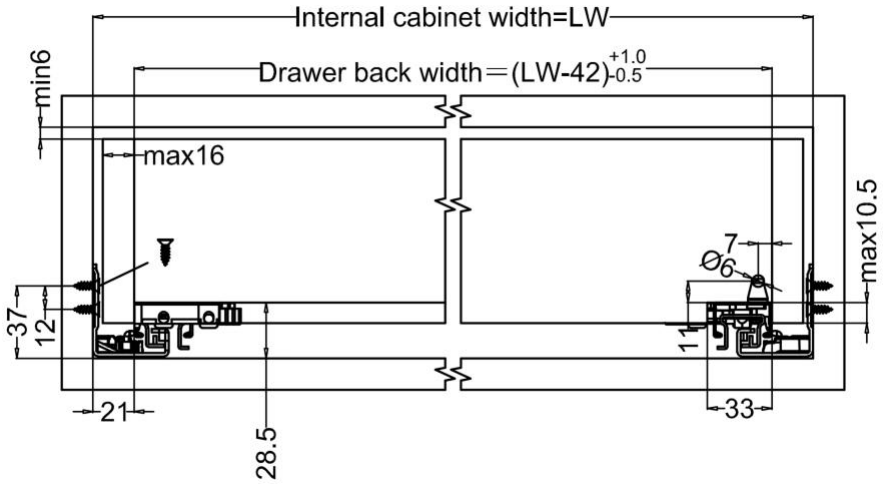

- **LW** =Ancho interno del gabinete **NL** =Longitud nominal del deslizador

Procedimiento de instalación

Paso 1: Deslice al gabinete (mm)

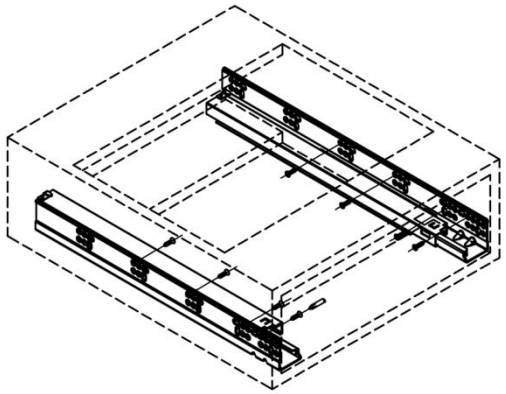

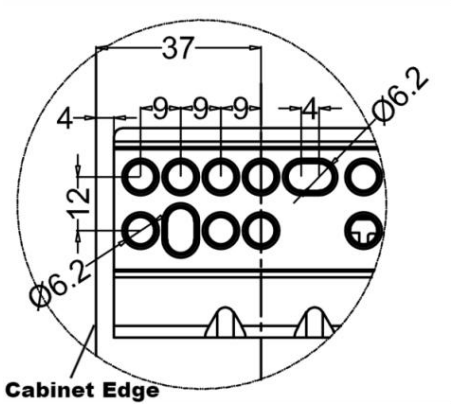

Paso 2: Bloqueo al gabinete

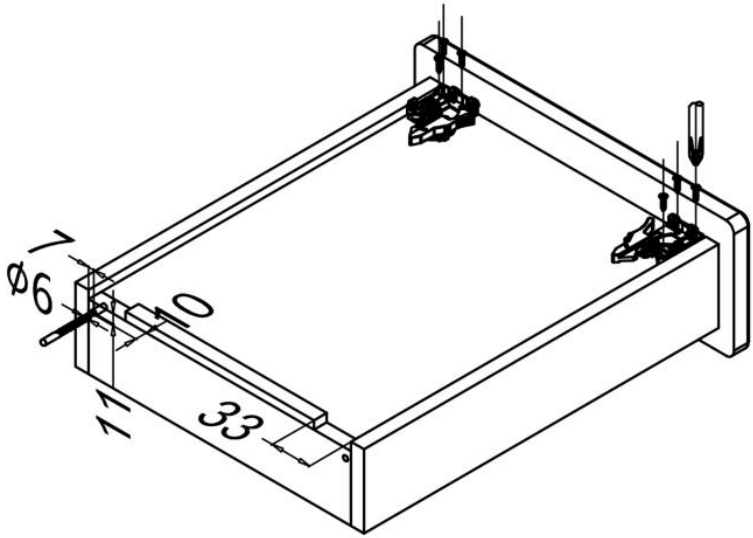

Paso 3:Ajustar el gabinete

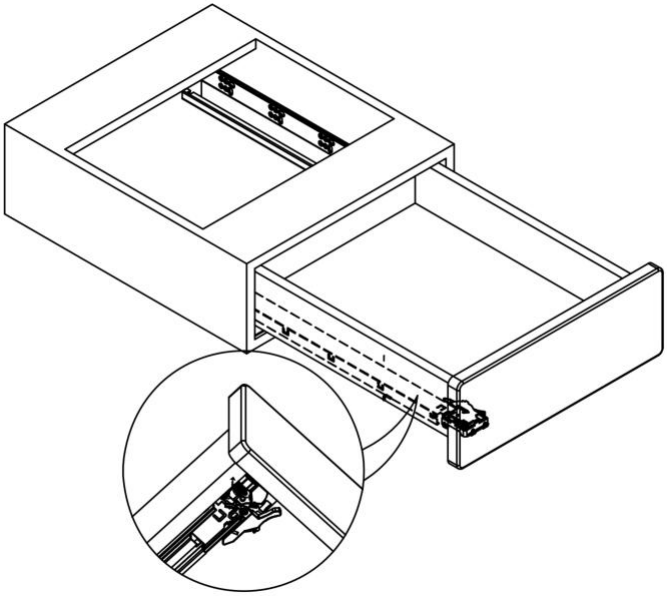

Paso 4: Gabinete de desmontaje

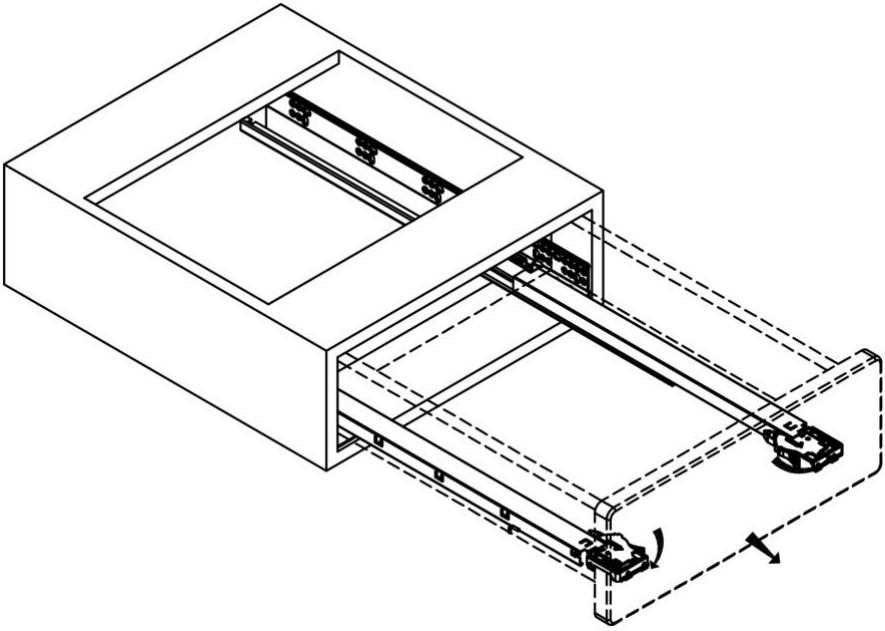

Dirección: Baoshanqu Shuangchenglu 803long 11hao 1602A-1609shi Shanghai
Importado a AUS: SIHAO PTY LTD . 1 ROKEVA STREET ASTWOOD NSW 2122 Australia
Importado a EE. UU.: Sanven Technology Ltd. Suite 250, 9166 Anaheim Place, Rancho Cucamonga, CA 91730

UK	REP

Pooledas Group Ltd
Unit 5 Albert Edward House, The Pavilions
Preston, United Kingdom

EC	REP

SHUNSHUN GmbH
Römeräcker 9 Z2021, 76351
Linkenheim-Hochstetten, Germany

Hecho en china

VEVOR®

TOUGH TOOLS, HALF PRICE

Técnico Certificado de soporte y garantía electrónica

www.vevor.com/support

VEVOR®

TOUGH TOOLS, HALF PRICE

Techniczny Certyfikat wsparcia i e-gwarancji www.vevor.com/support

PROWADNICE SZUFLAD

MODEL: 30201B

We continue to be committed to provide you tools with competitive price.
"Save Half", "Half Price" or any other similar expressions used by us only represents an estimate of savings you might benefit from buying certain tools with us compared to the major top brands and dose not necessarily mean to cover all categories of tools offered by us. You are kindly reminded to verify carefully when you are placing an order with us if you are actually saving half in comparison with the top major brands.

VEVOR®
TOUGH TOOLS, HALF PRICE

DRAWER SLIDES

MODEL: 30201B

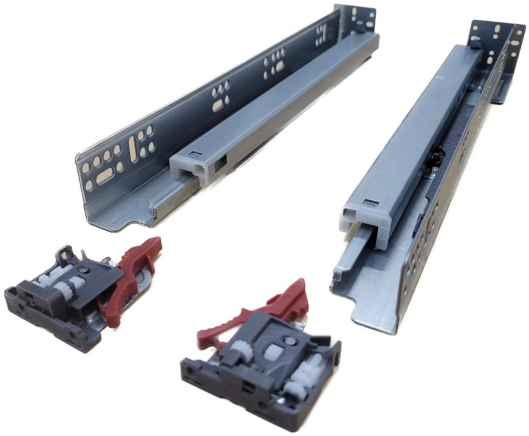

NEED HELP? CONTACT US!

Have product questions? Need technical support? Please feel free to contact us:

Technical Support and E-Warranty Certificate
www.vevor.com/support

This is the original instruction, please read all manual instructions carefully before operating. VEVOR reserves a clear interpretation of our user manual. The appearance of the product shall be subject to the product you received. Please forgive us that we won't inform you again if there are any technology or software updates on our product.

	Ostrzeżenie — aby zmniejszyć ryzyko obrażeń, użytkownik musi uważnie przeczytać instrukcję obsługi.

OSTRZEŻENIE:

1. Prosimy o złożenie produktu ściśle według instrukcji. Nieprawidłowy montaż może być niebezpieczny.
2. Podczas montażu należy nosić okulary ochronne i rękawice robocze.
3. Nie próbuj składać produktu będąc zmęczonym lub będąc pod wpływem alkoholu, narkotyków lub leków.
4. Nośność i inne parametry produktu odnoszą się wyłącznie do produktu prawidłowo i całkowicie zmontowanego.
5. Oddziel i policz wszystkie części i osprzęt.
6. Przygotuj następujące narzędzie: Śrubokręt Philips.
7. Jeśli korzystasz z elektronarzędzi, pamiętaj, aby zwolnić i zatrzymać się, jeśli zajdzie taka potrzeba.
8. Do montażu potrzebne są dwie osoby.
9. Postępuj zgodnie z przeznaczeniem.

Zapisz instrukcje.

Model	30201B.381-6	30201B.457-6	30201B.533-6	30201B.533-10
Odpowiednia długość szuflady (cale)	15	18	21	21
Długość przesuwu (mm)	333	408	483	483
Maks. Obciążenie dynamiczne	80 / 36,3			

(kg/funty)	
Maks. Obciążenie statyczne (kg/funty)	100 / 45,4

Lista części						
Kod	Zdjęcie	Nazwa	30201B.381-6	30201B.457-6	30201B.533-6	30201B.533-10
1		Slajd	6	6	6	10
2		Uchwyt	6	6	6	10
3		Śruby	72	72	72	120

Wprowadzenie produktów

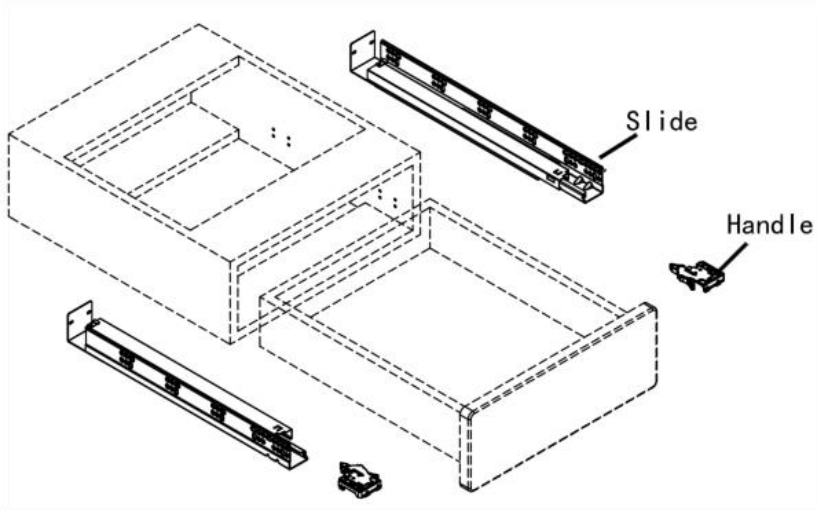

Wymiary montażowe (mm)

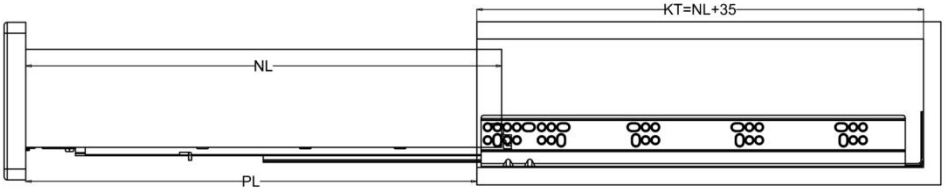

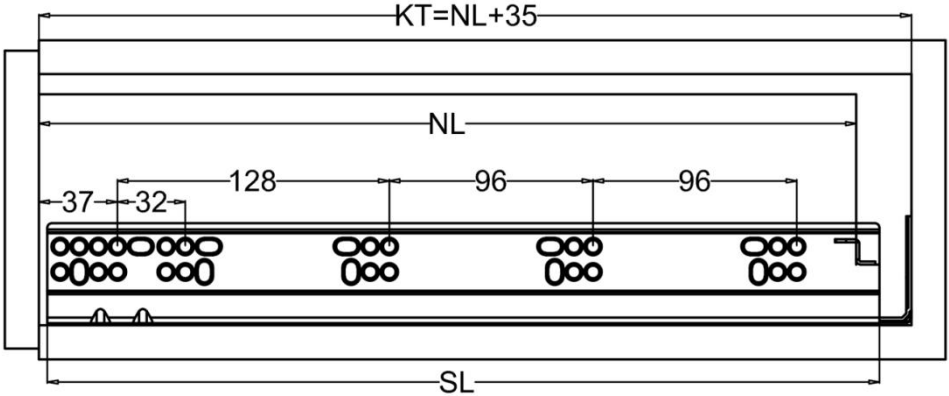

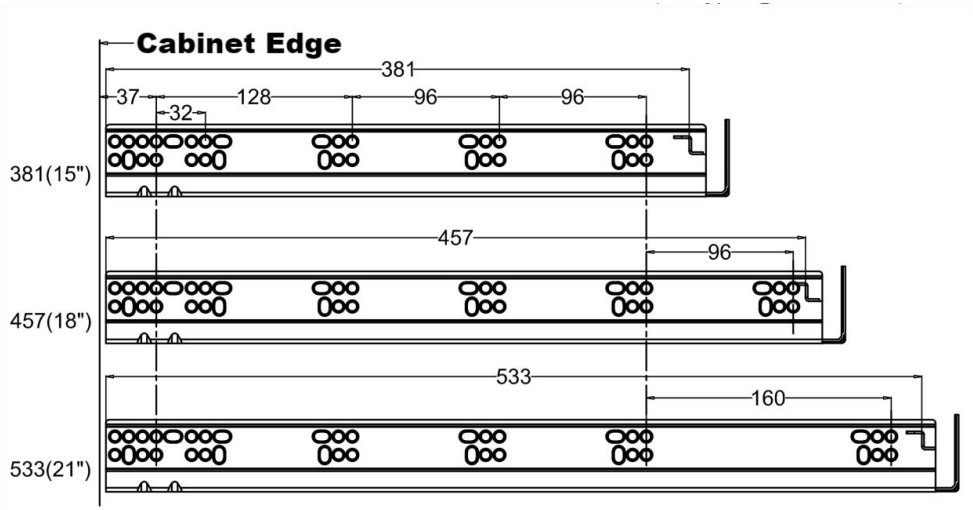

Model	SL(mm)	NL(mm)	KT(mm)
30201B.381-6	392	381	416
30201B.457-6	468	457	492

30201B.533-6	544	533	568
30201B.533-10	544	533	568

- **SL** = Długość prowadnicy **NL** = Nominalna długość prowadnicy
- **KT** = Min. głębokość szafki **PL** = Wyciągnij na długość

Rozmiar blokowania i rozmiar końca prowadnicy (mm)

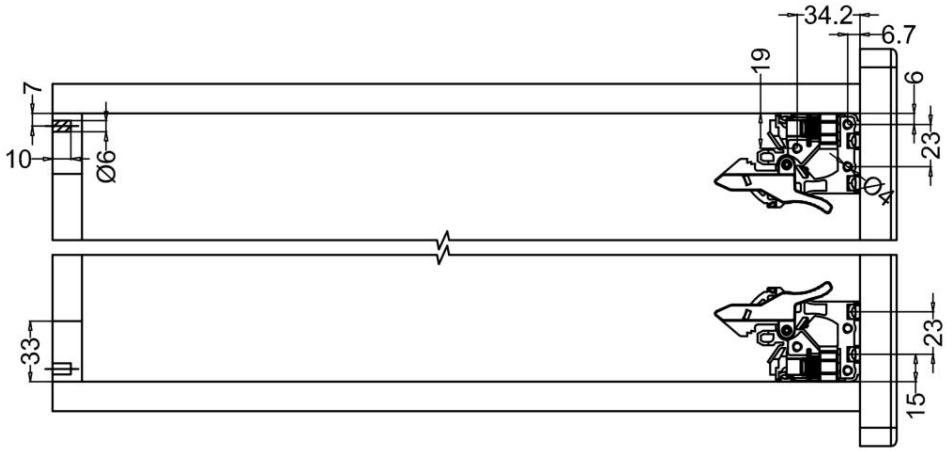

Wymiary zabudowy szuflady (mm)

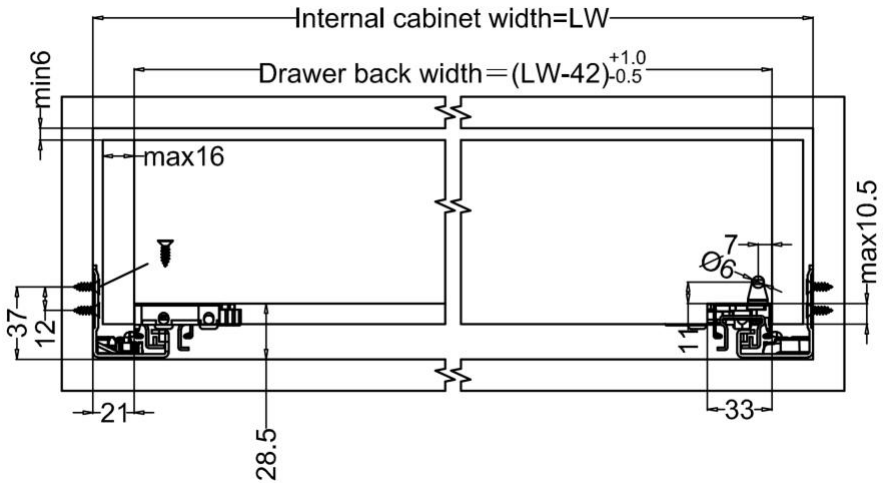

- **LW** = szerokość wewnętrzna szafki **NL** = nominalna długość prowadnicy

Procedura instalacji _

Krok 1: Przesuń do szafki (mm)

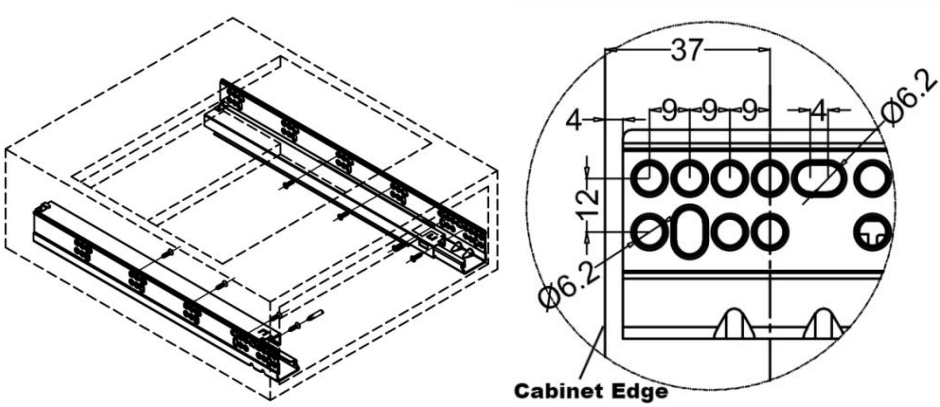

Krok 2: Blokowanie do szafki

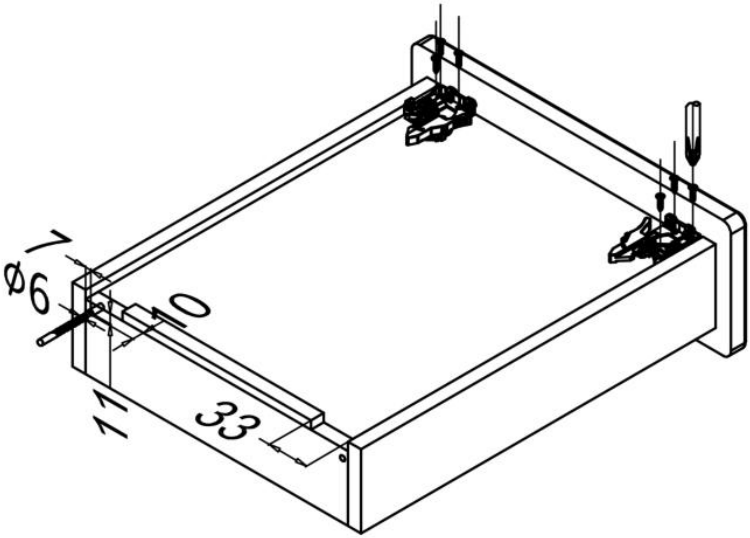

Krok 3: Dostosuj szafkę

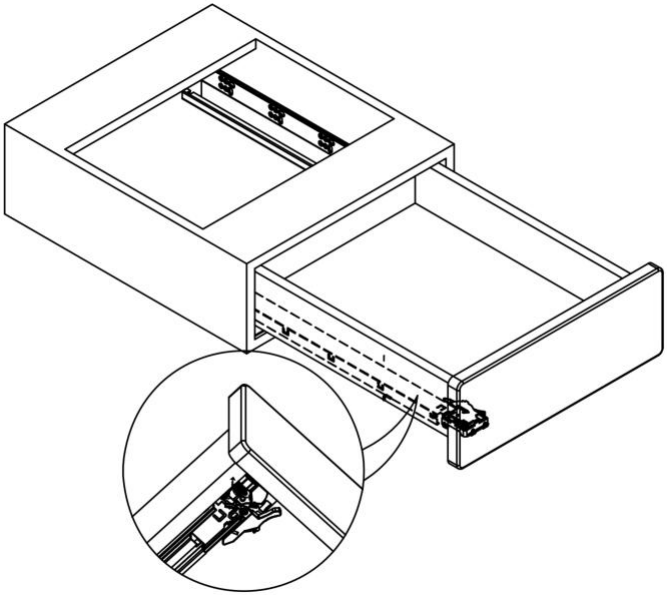

Krok 4: Szafka do demontażu

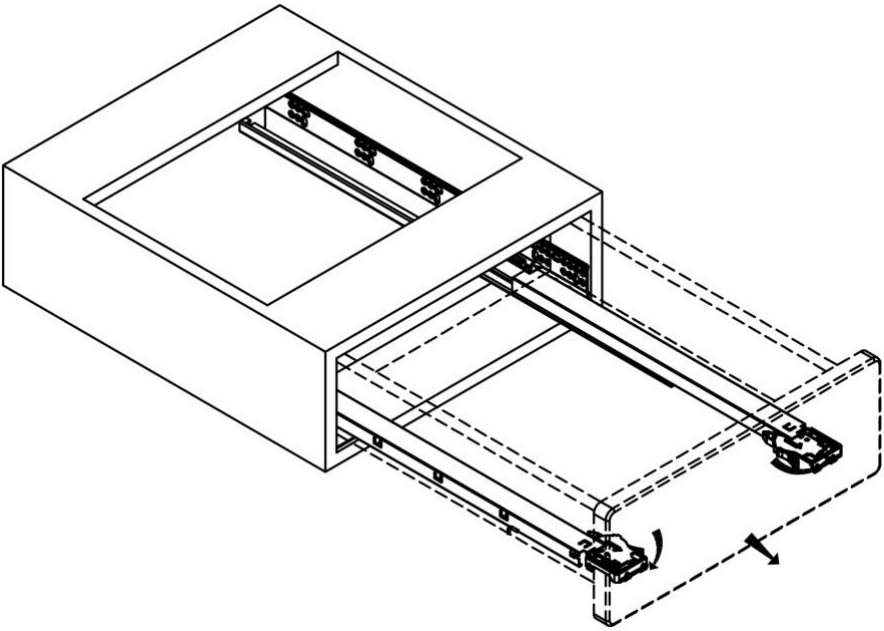

Adres: Baoshanqu Shuangchenglu 803long 11hao 1602A-1609shi Szanghaj

Import do AUS: SIHAO PTY LTD . 1 ROKEVA STREETEASTWOOD NSW 2122 Australia

Import do USA: Sanven Technology Ltd. Apartament 250, 9166 Anaheim Place, Rancho Cucamonga, Kalifornia 91730

UK	REP

Pooledas Group Ltd
Unit 5 Albert Edward House, The Pavilions
Preston, United Kingdom

EC	REP

SHUNSHUN GmbH
Römeräcker 9 Z2021, 76351
Linkenheim-Hochstetten, Germany

Wyprodukowano w Chinach

VEVOR®

TOUGH TOOLS, HALF PRICE

Techniczny Certyfikat wsparcia i e-gwarancji

www.vevor.com/support

VEVOR®

TOUGH TOOLS, HALF PRICE

Technisch Ondersteuning en e-garantiecertificaat www.vevor.com/support

LADEGELEIDERS

MODEL: 30201B

We continue to be committed to provide you tools with competitive price.
"Save Half", "Half Price" or any other similar expressions used by us only represents an estimate of savings you might benefit from buying certain tools with us compared to the major top brands and dose not necessarily mean to cover all categories of tools offered by us. You are kindly reminded to verify carefully when you are placing an order with us if you are actually saving half in comparison with the top major brands.

VEVOR®
TOUGH TOOLS, HALF PRICE

DRAWER SLIDES

MODEL: 30201B

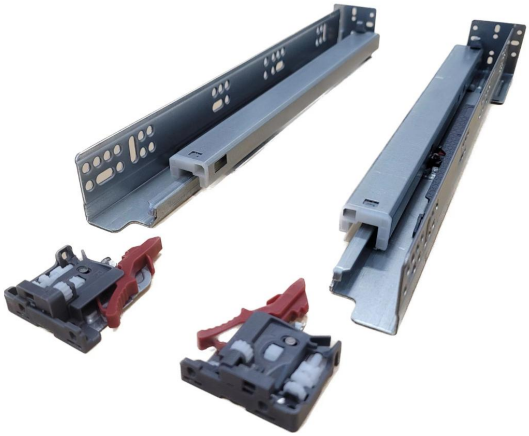

NEED HELP? CONTACT US!

Have product questions? Need technical support? Please feel free to contact us:

Technical Support and E-Warranty Certificate
www.vevor.com/support

This is the original instruction, please read all manual instructions carefully before operating. VEVOR reserves a clear interpretation of our user manual. The appearance of the product shall be subject to the product you received. Please forgive us that we won't inform you again if there are any technology or software updates on our product.

	Waarschuwing-Om het risico op letsel te verminderen, moet de gebruiker de handleiding zorgvuldig lezen.

WAARSCHUWING:

1. Monteer het product strikt volgens de instructies. Een onjuiste montage kan gevaarlijk zijn.
2. Draag tijdens de montage een veiligheidsbril en werkhandschoenen.
3. Probeer het product niet in elkaar te zetten als u zich moe voelt of onder invloed bent van alcohol, drugs of medicijnen.
4. Draagvermogen en andere productparameters gelden alleen voor het correct en compleet gemonteerde product.
5. Scheid en tel alle onderdelen en hardware.
6. Houd het volgende gereedschap gereed: kruiskopschroevendraaier.
7. Als u elektrisch gereedschap gebruikt, zorg er dan voor dat u langzamer gaat rijden en stopt wanneer dat nodig is.
8. Voor de montage zijn twee personen nodig.
9. Volg uitsluitend het beoogde gebruik.

Bewaar de instructies.

Model	30201B.381-6	30201B.457-6	30201B.533-6	30201B.533-10
Toepasselijke ladelengte (inch)	15	18	21	21
Glijdende lengte (mm)	333	408	483	483
Max. Dynamische belasting (kg/lbs)	80 / 36,3			
Max. Statische	100 / 45,4			

belasting (kg/lbs)	

Onderdelen lijst						
Code	Afbeelding	Naam	30201B.381-6	30201B.457-6	30201B.533-6	30201B.533-10
1		Dia	6	6	6	10
2		Hendel	6	6	6	10
3		Schroeven	72	72	72	120

product Introductie

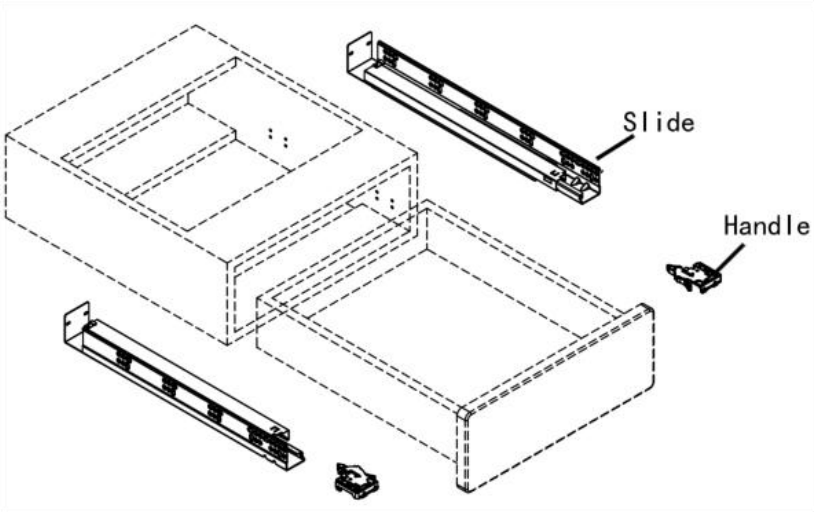

Installatieafmetingen (mm)

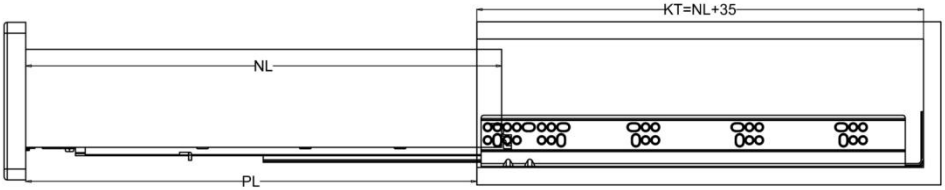

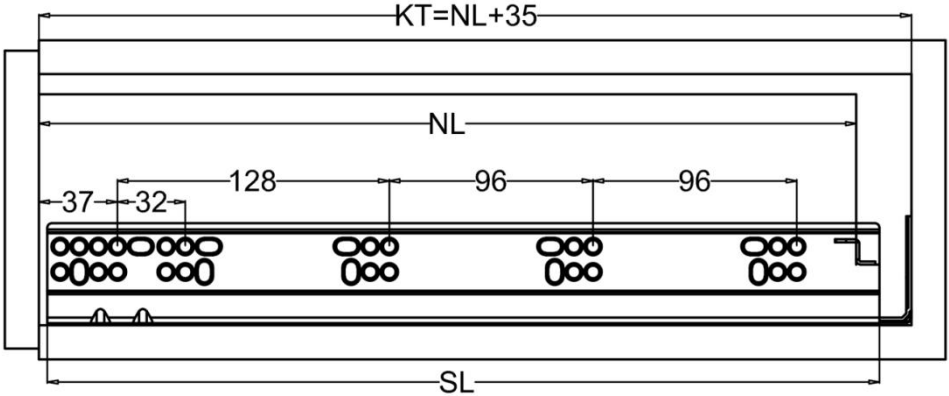

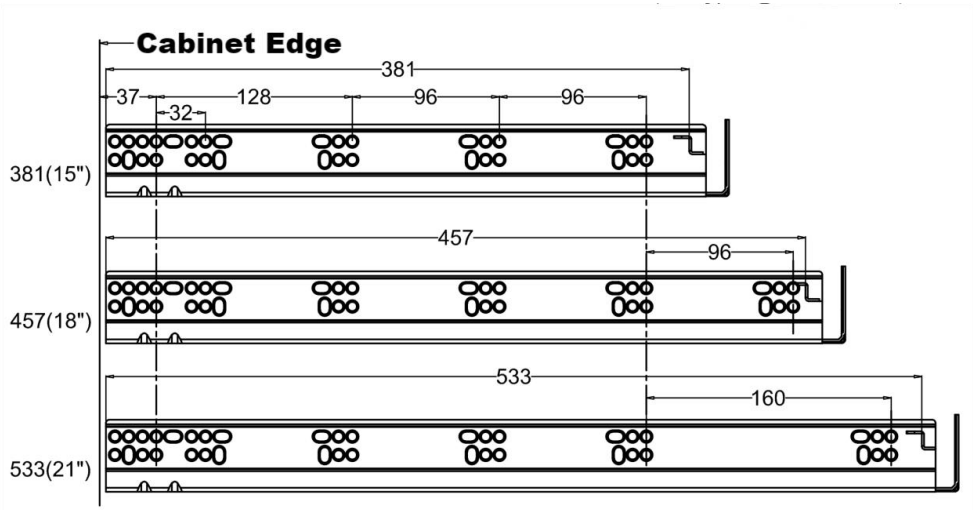

Model	SL(mm)	NL(mm)	KT(mm)
30201B.381-6	392	381	416
30201B.457-6	468	457	492

30201B.533-6	544	533	568
30201B.533-10	544	533	568

- **SL** =Glijlengte **NL** =Nominale Glijlengte
- **KT** = Minimale kastdiepte **PL** = Trek de lengte eruit

Vergrendelgrootte en grootte van het einde van de glijbaan (mm)

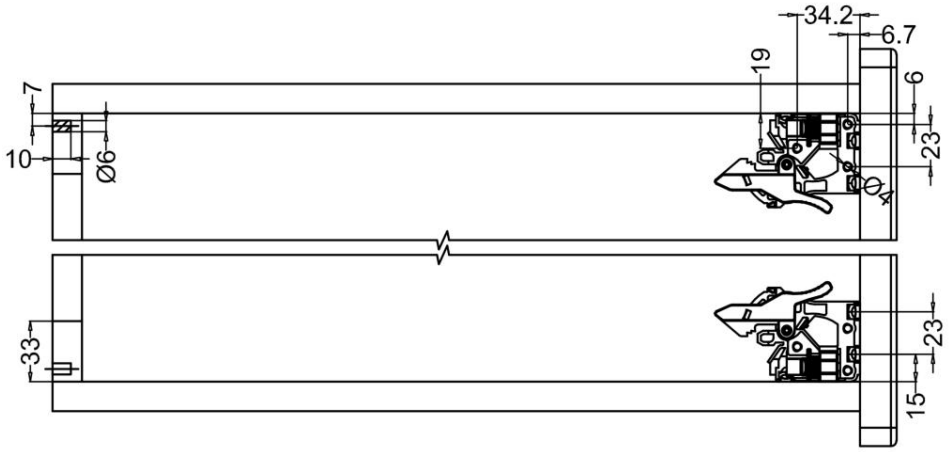

Lade -inbouwafmetingen (mm)

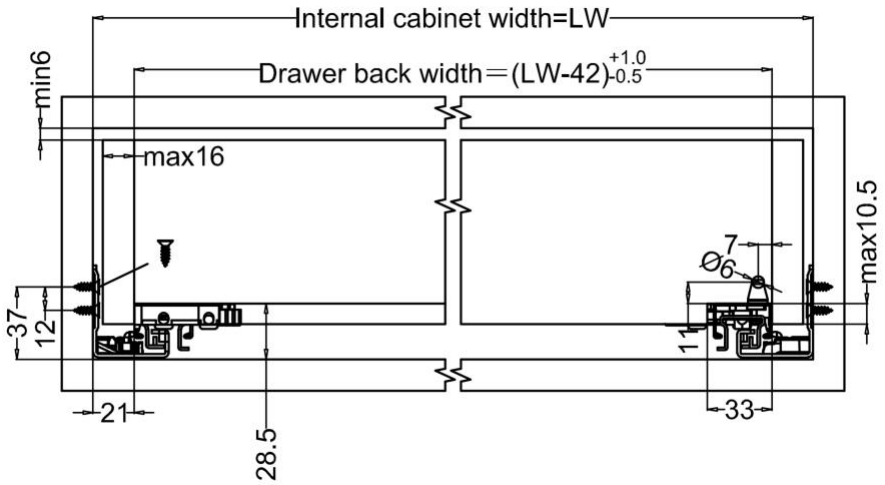

- **LW** =Interne kastbreedte **NL** =Nominale schuiflengte

Installatieprocedure _ _

Stap 1: Schuif naar kast (mm)

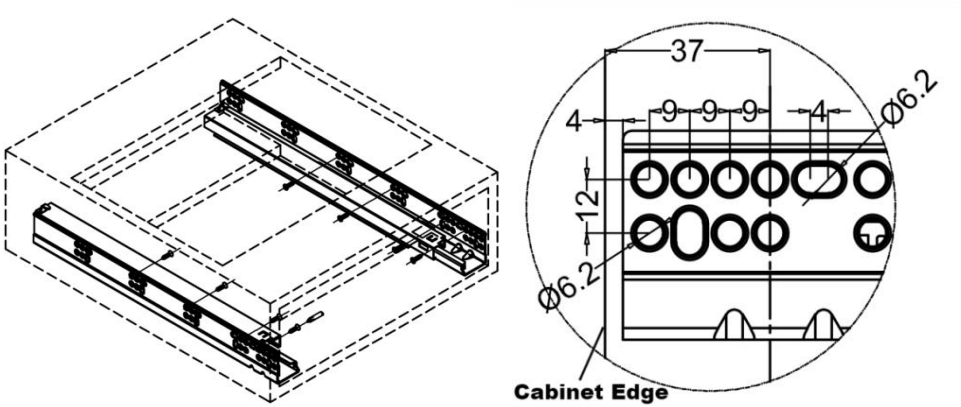

Stap 2: Vergrendelen aan kast

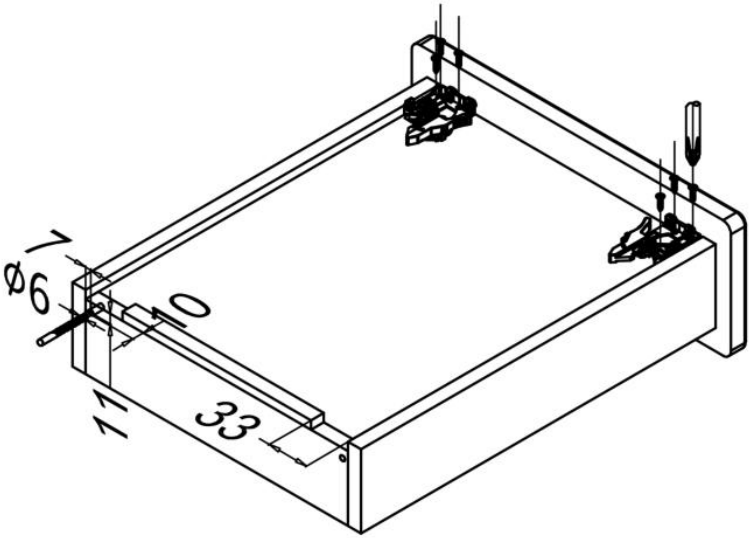

Stap 3: Pas de kast aan

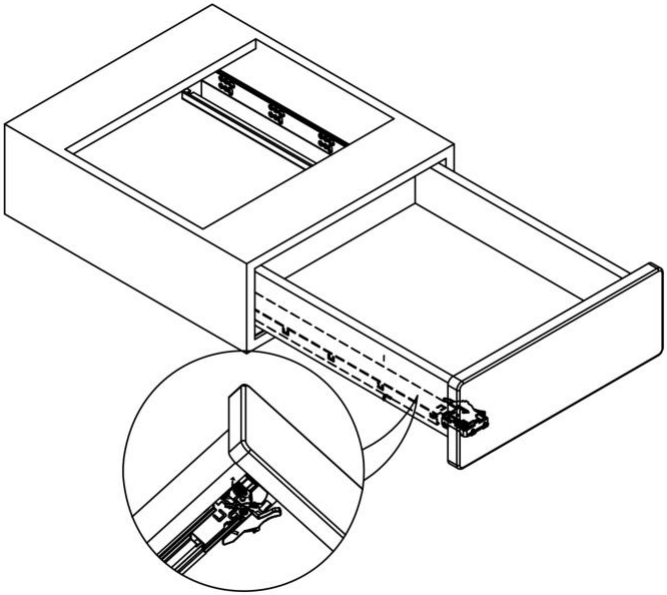

Stap 4: Demontage kast

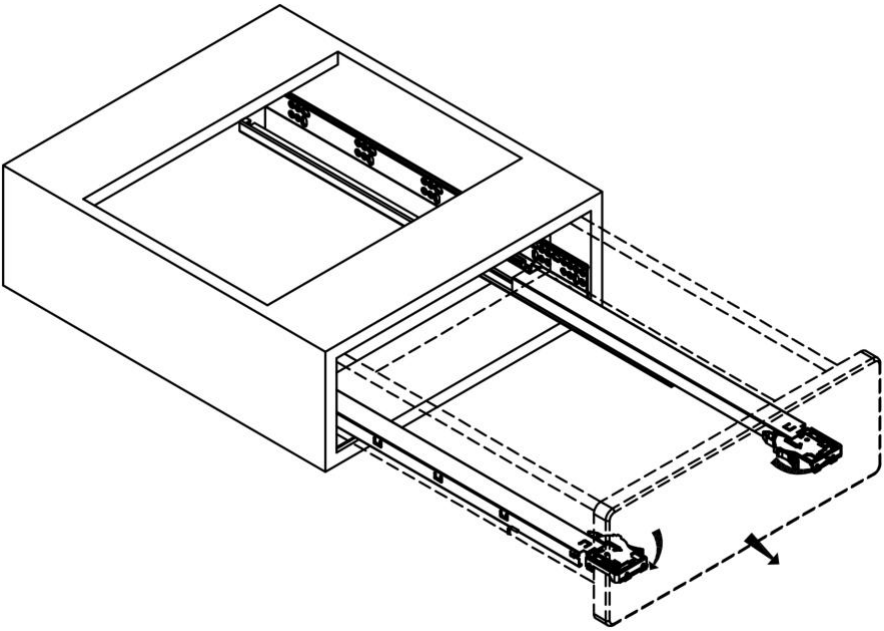

Adres: Baoshanqu Shuangchenglu 803long 11hao 1602A-1609shi Shanghai
Geïmporteerd naar AUS: SIHAO PTY LTD . 1 ROKEVA STREETEASTWOOD NSW 2122 Australië
Geïmporteerd naar de VS: Sanven Technology Ltd. Suite 250, 9166 Anaheim Place, Rancho Cucamonga, CA 91730

UK	REP

Pooledas Group Ltd
Unit 5 Albert Edward House, The Pavilions
Preston, United Kingdom

EC	REP

SHUNSHUN GmbH
Römeräcker 9 Z2021, 76351
Linkenheim-Hochstetten, Germany

Gemaakt in China

VEVOR®

TOUGH TOOLS, HALF PRICE

Technisch Ondersteuning en e-garantiecertificaat

www.vevor.com/support

VEVOR®

TOUGH TOOLS, HALF PRICE

Teknisk Support och e-garanticertifikat www.vevor.com/support

UTDRAGSLÅDOR

MODELL: 30201B

We continue to be committed to provide you tools with competitive price.
"Save Half", "Half Price" or any other similar expressions used by us only represents an estimate of savings you might benefit from buying certain tools with us compared to the major top brands and dose not necessarily mean to cover all categories of tools offered by us. You are kindly reminded to verify carefully when you are placing an order with us if you are actually saving half in comparison with the top major brands.

VEVOR®
TOUGH TOOLS, HALF PRICE

DRAWER SLIDES

MODELL: 30201B

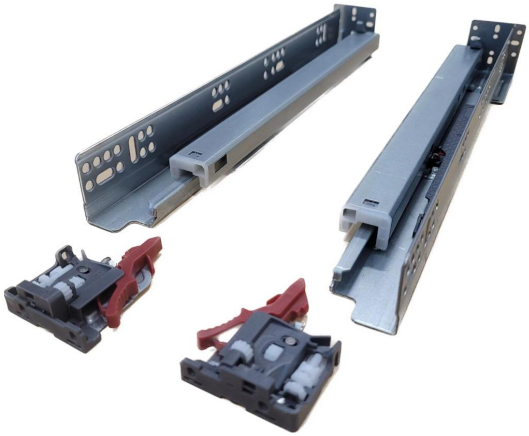

NEED HELP? CONTACT US!

Have product questions? Need technical support? Please feel free to contact us:

Technical Support and E-Warranty Certificate
www.vevor.com/support

This is the original instruction, please read all manual instructions carefully before operating. VEVOR reserves a clear interpretation of our user manual. The appearance of the product shall be subject to the product you received. Please forgive us that we won't inform you again if there are any technology or software updates on our product.

	Varning - För att minska risken för skada måste användaren läsa instruktionerna noggrant.

VARNING:

1. Vänligen montera produkten i strikt enlighet med instruktionerna. Felaktig montering kan vara farligt.
2. Använd skyddsglasögon och arbetshandskar ordentligt under monteringen.
3. Försök inte att sätta ihop produkten när du känner dig trött eller är påverkad av alkohol, droger eller medicin.
4. Bärförmåga och andra produktparametrar tillämpas endast på den korrekt och färdigmonterade produkten.
5. Separera och räkna alla delar och hårdvara.
6. Förbered följande verktyg: Philips huvudskruvmejsel.
7. Om du använder elverktyg, var noga med att sakta ner och stanna vid behov.
8. Två personer krävs för montering.
9. Följ endast avsedd användning.

Spara instruktionerna.

Modell	30201B.381-6	30201B.457-6	30201B.533-6	30201B.533-10
Tillämplig lådlängd (tum)	15	18	21	21
Glidlängd (mm)	333	408	483	483
Max. Dynamisk belastning (kg/lbs)	80/36,3			

Max. Statisk belastning (kg/lbs)	100/45,4

Dellista						
Koda	Bild	namn	30201B.381-6	30201B.457-6	30201B.533-6	30201B.533-10
1		Glida	6	6	6	10
2		Hantera	6	6	6	10
3		Skruvar	72	72	72	120

produkt introduktion

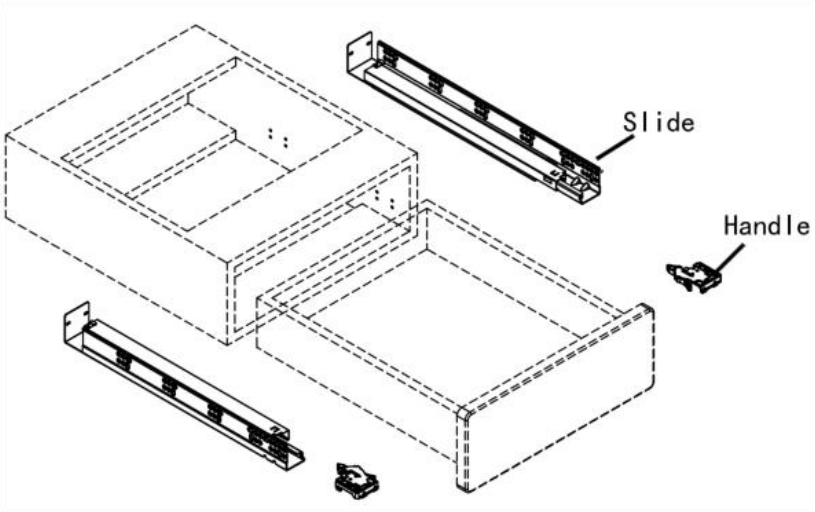

Installationsmått (mm)

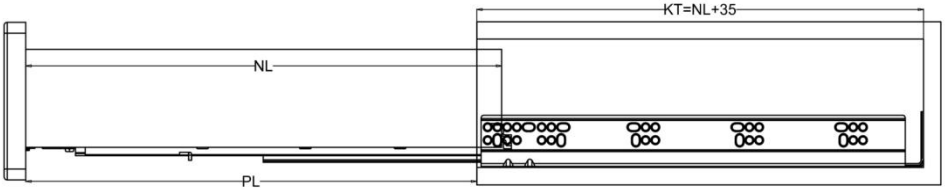

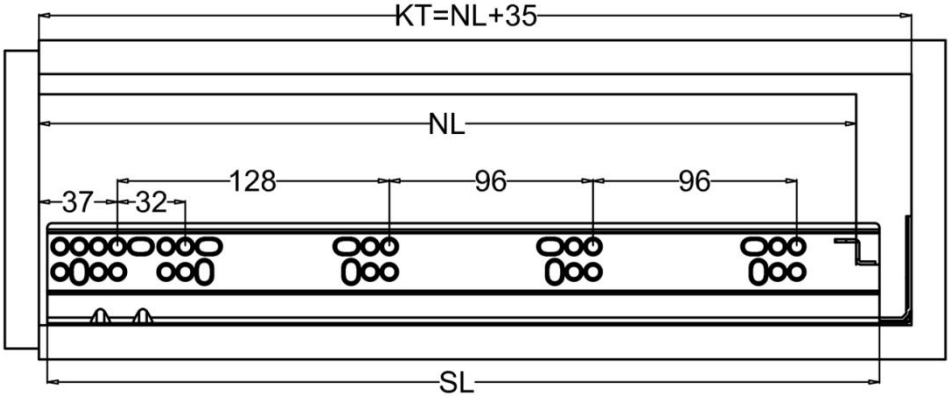

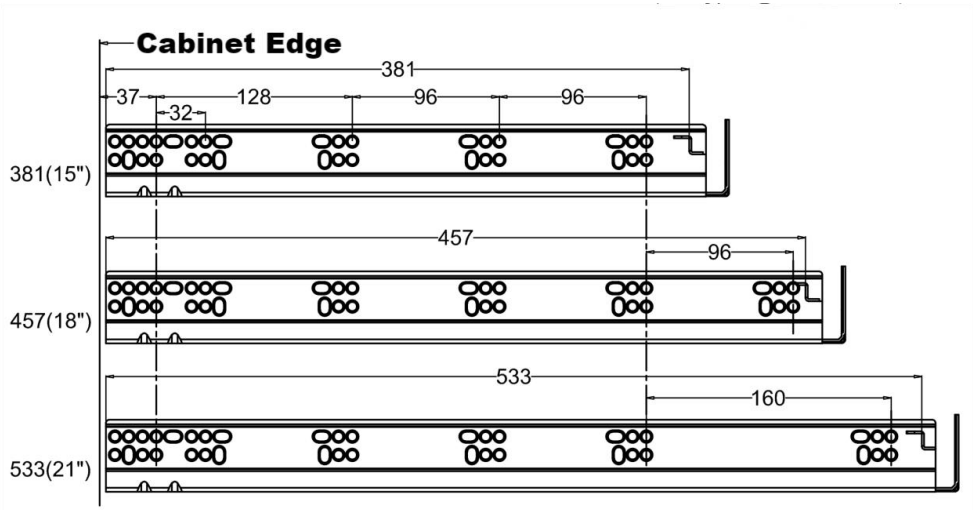

Modell	SL(mm)	NL(mm)	KT(mm)
30201B.381-6	392	381	416
30201B.457-6	468	457	492

30201B.533-6	544	533	568
30201B.533-10	544	533	568

- **SL** =Slidlängd **NL** =Nominell slidlängd
- **KT** =Min. djup på skåpet **PL** =Dra ut längden

Låsstorlek och ändstorlek på glid (mm)

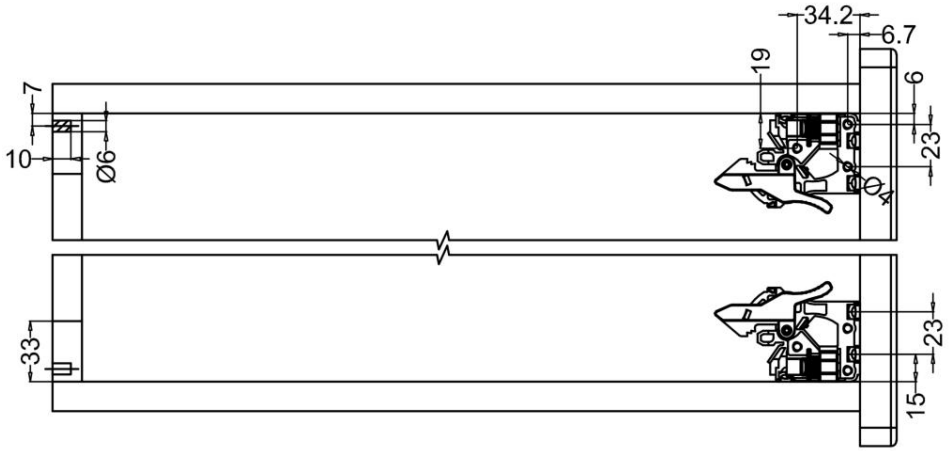

Låd I nstallation Mått (mm)

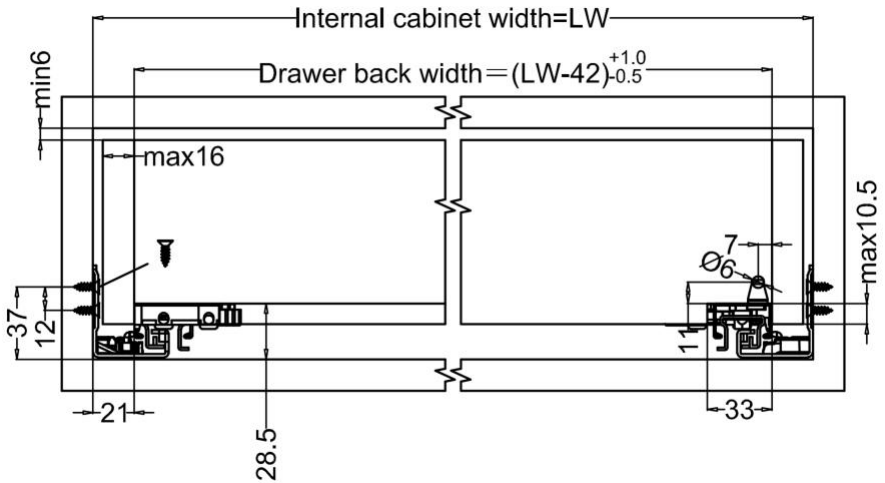

- **LW** =Innerskåpsbredd **NL** =Nominell glidlängd

Installationsprocedur _ _

Steg 1: Skjut till skåpet (mm)

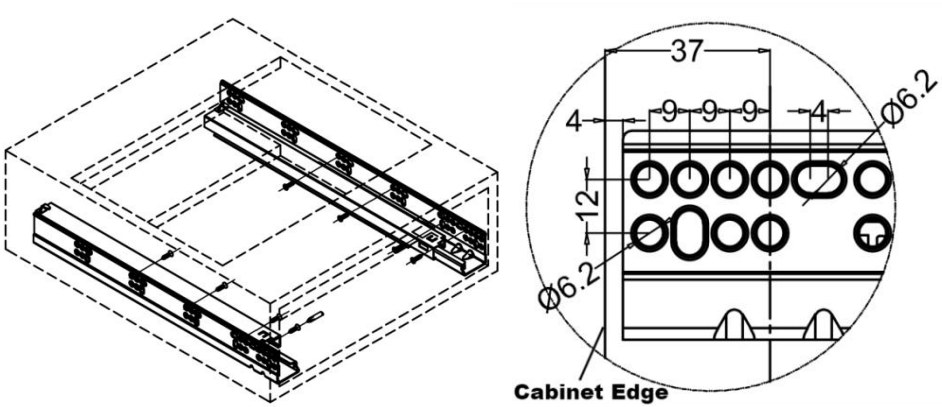

Steg 2: Låsning till skåpet

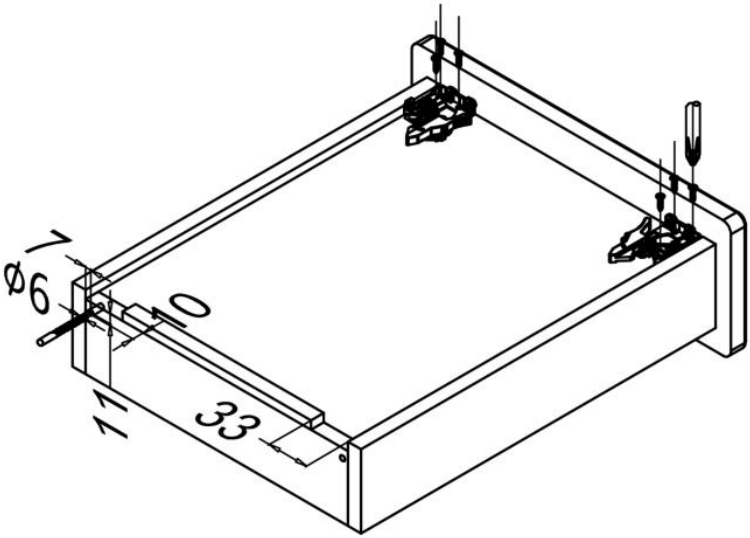

Steg 3: Justera skåpet

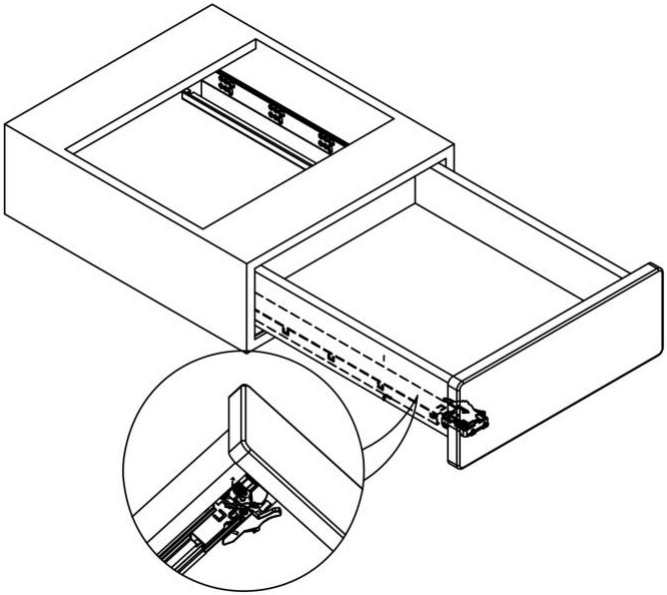

Steg 4: Demontering av skåp

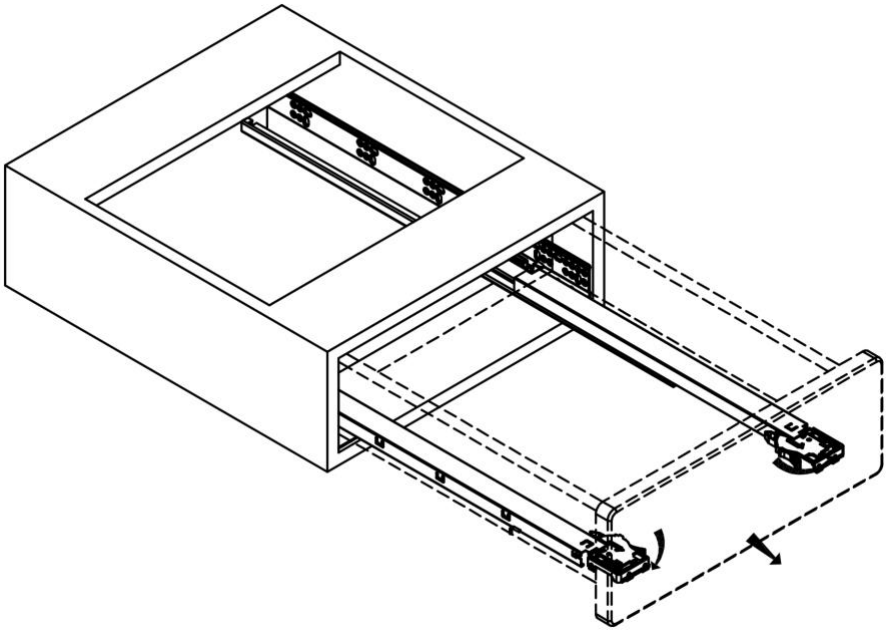

Adress: Baoshanqu Shuangchenglu 803long 11hao 1602A-1609shi Shanghai

Importerad till AUS: SIHAO PTY LTD . 1 ROKEVA STREETEASTWOOD NSW 2122 Australien

till **USA:** Sanven Technology Ltd. Suite 250, 9166 Anaheim Place, Rancho Cucamonga, CA 91730

UK	REP

Pooledas Group Ltd
Unit 5 Albert Edward House, The Pavilions
Preston, United Kingdom

EC	REP

SHUNSHUN GmbH
Römeräcker 9 Z2021, 76351
Linkenheim-Hochstetten, Germany

Tillverkad i Kina

VEVOR®

TOUGH TOOLS, HALF PRICE

Teknisk Support och e-garanticertifikat

www.vevor.com/support