VEVOR®

TOUGH TOOLS, HALF PRICE

Technical Support and E-Warranty Certificate www.vevor.com/support

PILLAR TYPE CAT TREES

USER MANUAL

We continue to be committed to provide you tools with competitive price.
"Save Half", "Half Price" or any other similar expressions used by us only represents an estimate of savings you might benefit from buying certain tools with us compared to the major top brands and does not necessarily mean to cover all categories of tools offered by us. You are kindly reminded to verify carefully when you are placing an order with us if you are actually saving half in comparison with the top major brands.

VEVOR®

TOUGH TOOLS, HALF PRICE

PILLAR TYPE CAT TREES

MODEL: CAT789

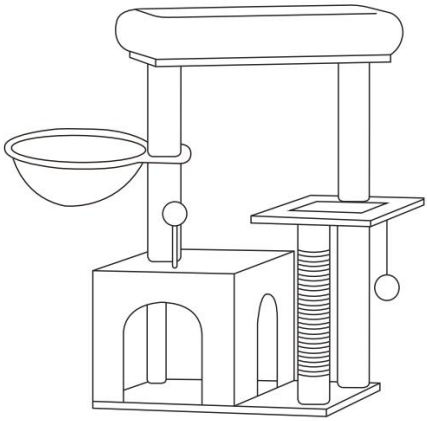

NEED HELP? CONTACT US!

Have product questions? Need technical support? Please feel free to contact us:

Technical Support and E-Warranty Certificate
www.vevor.com/support

This is the original instruction, please read all manual instructions carefully before operating. VEVOR reserves a clear interpretation of our user manual. The appearance of the product shall be subject to the product you received. Please forgive us that we won't inform you again if there are any technology or software updates on our product.

SAFETY INSTRUCTIONS

WARNING:

Read this instructions carefully before using this product. Failure to do so can result in serious injury.

Assembly precautions

1. Assemble only should be according to these instructions. Improper assembly can result in hazards.
2. Wear ANSI-approved safety goggles and heavy-duty work gloves during assembly.
3. Keep the assembly area clean and well-lit.
4. Keep bystanders out of the area during assembly.
5. Do not assemble when tired or when under the influence of alcohol, drugs or medication.
6. The product capabilities apply to properly and completely assembled products only.
7. Assemble on a flat, level, hard and smooth surface capable of safely supporting the Pillar Type Cat Trees.
8. For additional information regarding the parts listed in the following pages, please refer to the Assembly Diagram of this manual. Unwrap and separate all parts in a clean work area.

Use precautions

1. This product is not a toy. Do not allow children to play with or near this item.
2. Do not exceed weight capacities.
3. Use only on a flat, level, hard and smooth surface capable of safely supporting a fully loaded Pillar Type Cat Trees.
4. Use as intended only.
5. Inspect before every use; do not use if parts are loose or damaged.

SAVE THESE INSTRUCTIONS

PARTS LIST

1		1pc		9		2pcs	21.5cm
2		1pc		10		4pcs	27cm
3		1pc		11		1pc	
4		1pc		A		14pcs	M8*35mm
5		1pc		B		2pcs	M8*80mm
6		1pc	39cm	C		1pc	
7		1pc	39cm				
8		1pc	31cm				

ASSEMBLY STEP

Step1：Install 10 inside the four corners of Cat House 1 for supported.

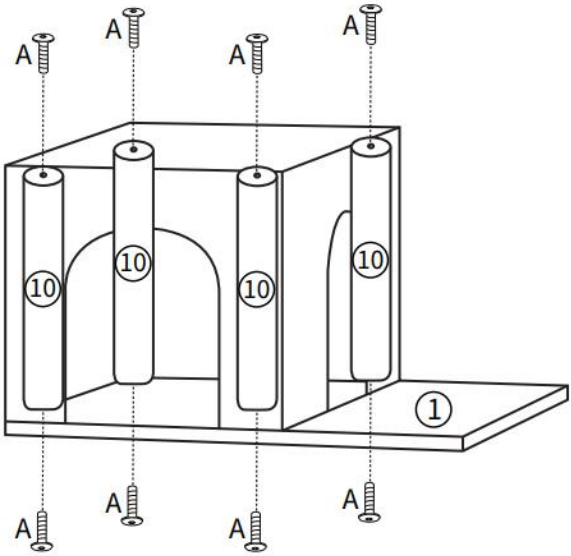

Step2：Install 6 and 7 to the outside of cat House 1 for supported.

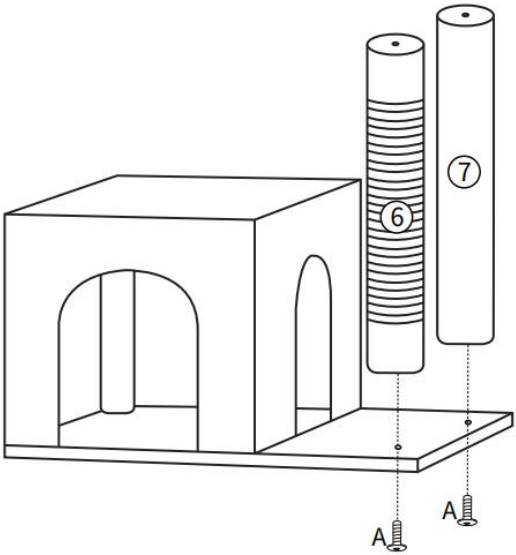

Step3：Install 5 and 9 to the top of the Cat house 1.

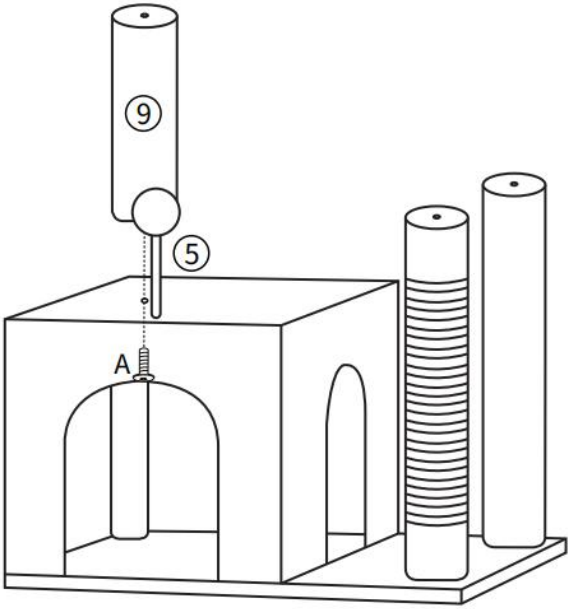

Step4：Install 2,3,8,9 as showed below.

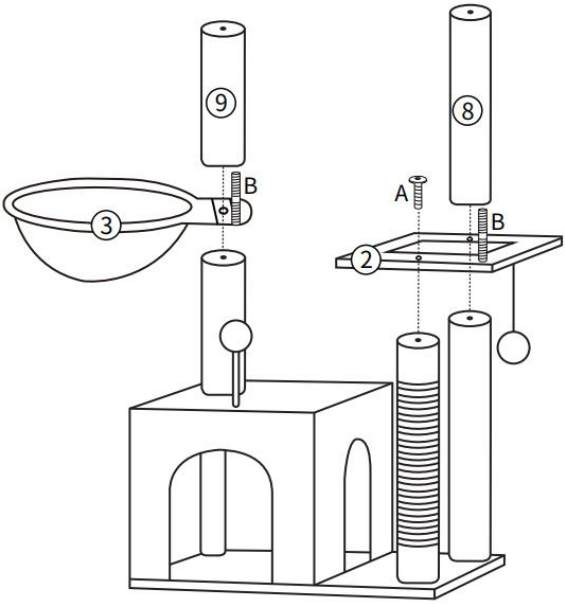

Step5：Finally install 4 and 11 to the top as below.

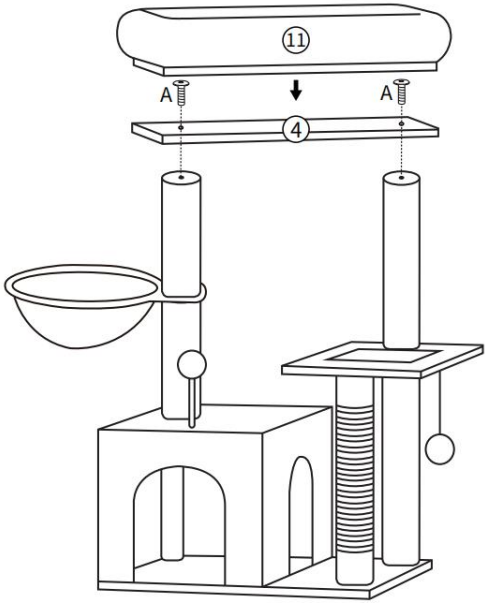

Finished

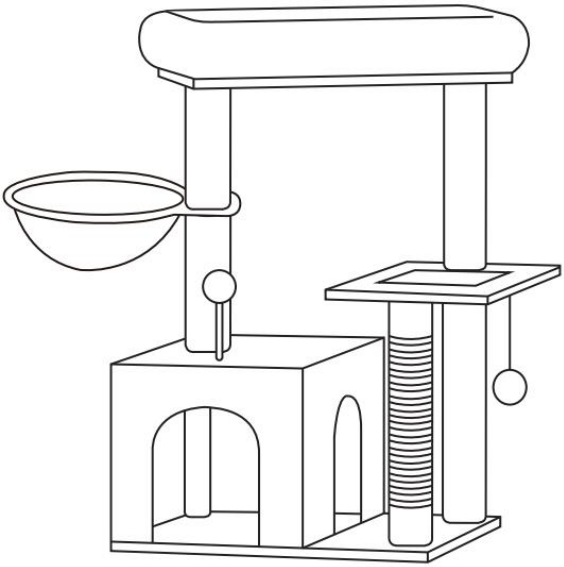

PRODUCT PARAMETER

Model	**CAT789**
Colour	Light Gray or Deep Gray
Type	4 floors with 1 cat house
Material	Particleboard, Paper tube column, Plush, Sisal

Manufacturer: Shanghaimuxinmuyeyouxiangongsi
Address: Shuangchenglu 803nong11hao1602A-1609shi, baoshanqu, shanghai 200000 CN.
Imported to AUS: SIHAO PTY LTD. 1 ROKEVA STREETEASTWOOD NSW 2122 Australia
Imported to USA: Sanven Technology Ltd. Suite 250, 9166 Anaheim Place, Rancho Cucamonga, CA 91730

EC REP

E-CrossStu GmbH
Mainzer Landstr.69, 60329 Frankfurt am Main.

UK REP

YH CONSULTING LIMITED.
C/O YH Consulting Limited Office 147, Centurion House,
London Road, Staines-upon-Thames, Surrey, TW18 4AX

VEVOR®

TOUGH TOOLS, HALF PRICE

Technical Support and E-Warranty Certificate

www.vevor.com/support

VEVOR®

TOUGH TOOLS, HALF PRICE

Techniczny Certyfikat wsparcia i e-gwarancji www.vevor.com/support

DRAPAKI DLA KOTÓW TYPU SŁUPKOWEGO

INSTRUKCJA obsługi

We continue to be committed to provide you tools with competitive price.
"Save Half", "Half Price" or any other similar expressions used by us only represents an estimate of savings you might benefit from buying certain tools with us compared to the major top brands and does not necessarily mean to cover all categories of tools offered by us. You are kindly reminded to verify carefully when you are placing an order with us if you are actually saving half in comparison with the top major brands.

VEVOR®

TOUGH TOOLS, HALF PRICE

PILLAR TYPE CAT TREES

MODEL: CAT789

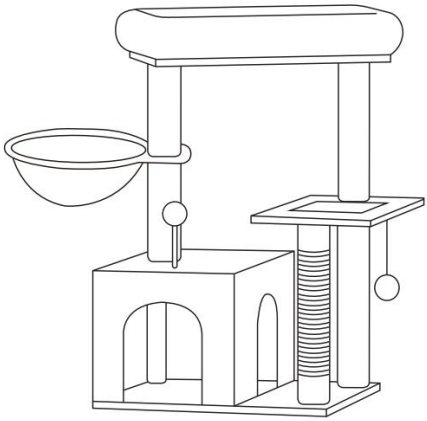

NEED HELP? CONTACT US!

Have product questions? Need technical support? Please feel free to contact us:

Technical Support and E-Warranty Certificate
www.vevor.com/support

This is the original instruction, please read all manual instructions carefully before operating. VEVOR reserves a clear interpretation of our user manual. The appearance of the product shall be subject to the product you received. Please forgive us that we won't inform you again if there are any technology or software updates on our product.

OSTRZEŻENIE:

Przeczytaj uważnie niniejszą instrukcję przed użyciem tego produktu. Niezastosowanie się do tego może spowodować poważne obrażenia.

Środki ostrożności podczas montażu

9. Montaż powinien odbywać się wyłącznie zgodnie z niniejszą instrukcją. Nieprawidłowy montaż może powodować zagrożenia.
10. Podczas montażu należy nosić okulary ochronne i wytrzymałe rękawice robocze zatwierdzone przez ANSI.
11. Utrzymuj miejsce zbiórki w czystości i dobrze oświetlone.
12. Podczas montażu trzymaj osoby postronne z dala od obszaru.
13. Nie należy montować, gdy jest się zmęczonym lub pod wpływem alkoholu, narkotyków lub leków.
14. Możliwości produktu dotyczą wyłącznie produktów prawidłowo i całkowicie zmontowanych.
15. Zmontuj na płaskiej, równej, twardej i gładkiej powierzchni, która może bezpiecznie utrzymać drapaki dla kotów typu słupkowego.
16. Dodatkowe informacje dotyczące części wymienionych na kolejnych stronach można znaleźć w schemacie montażu w niniejszej instrukcji. Rozpakuj i oddziel wszystkie części w czystym miejscu pracy.

Stosuj środki ostrożności

6. Ten produkt nie jest zabawką. Nie pozwalaj dzieciom bawić się tym przedmiotem lub w jego pobliżu.
7. Nie przekraczaj udźwigu.
8. Używaj wyłącznie na płaskiej, równej, twardej i gładkiej powierzchni, która może bezpiecznie utrzymać w pełni obciążone drapaki typu słupkowego.
9. Używaj wyłącznie zgodnie z przeznaczeniem.
10. Sprawdź przed każdym użyciem; nie używać, jeśli części są luźne lub uszkodzone.

ZACHOWAJ TE INSTRUKCJE

PARTS LIST

1		1pc		9		2pcs	21.5cm
2		1pc		10		4pcs	27cm
3		1pc		11		1pc	
4		1pc		A		14pcs	M8*35mm
5		1pc		B		2pcs	M8*80mm
6		1pc	39cm	C		1pc	
7		1pc	39cm				
8		1pc	31cm				

ASSEMBLY STEP

Krok 1: Zainstaluj 10 w czterech rogach Cat House 1, aby uzyskać wsparcie.

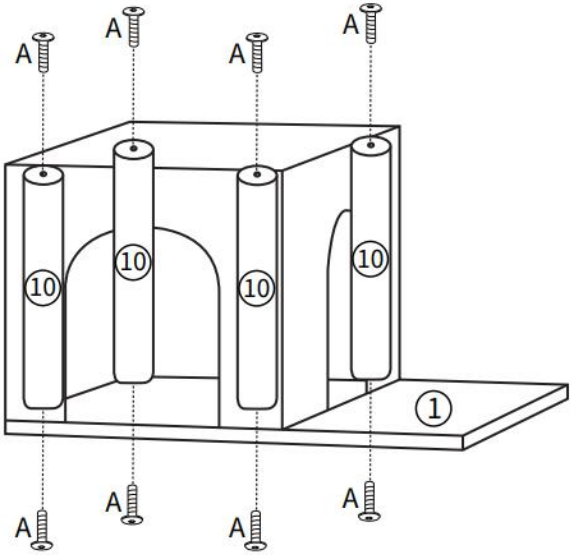

Krok 2: Zainstaluj 6 i 7 na zewnątrz domu kota 1, aby uzyskać wsparcie.

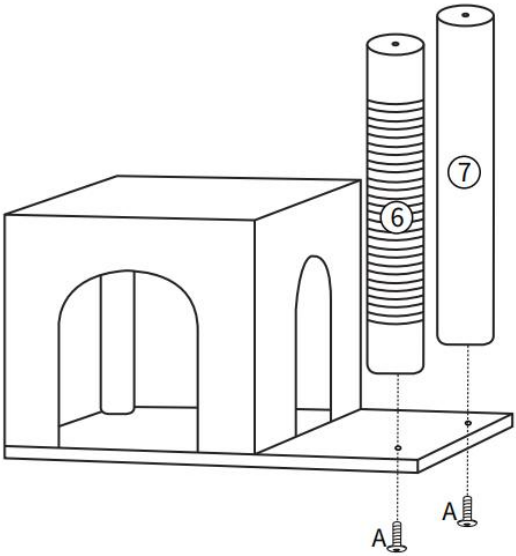

Krok 3: Zamontuj elementy 5 i 9 na górze domku dla kotów 1.

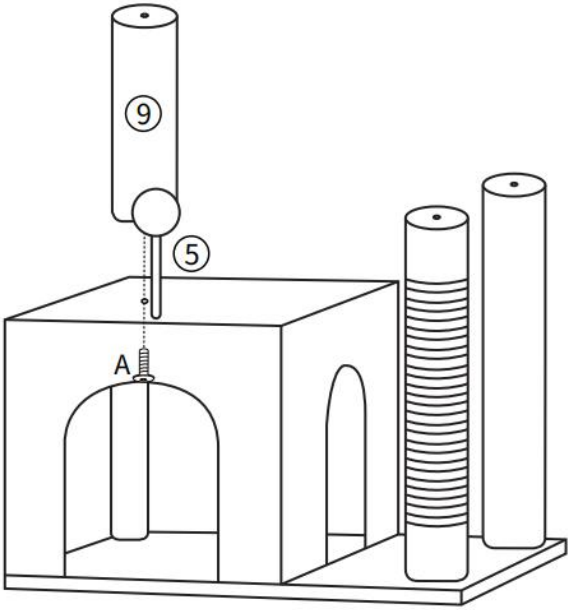

Krok 4: Zainstaluj 2,3,8,9 jak pokazano poniżej.

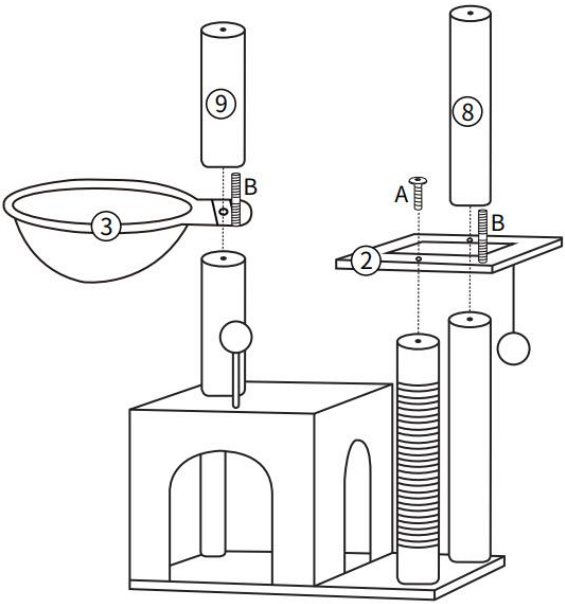

Krok 5: Na koniec zainstaluj 4 i 11 na górze, jak poniżej.

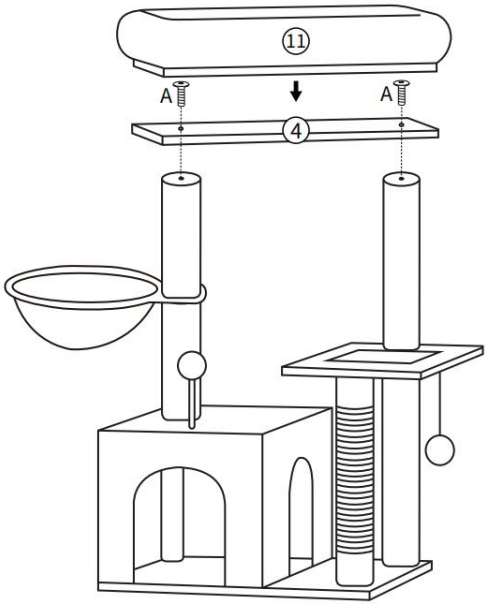

Skończone

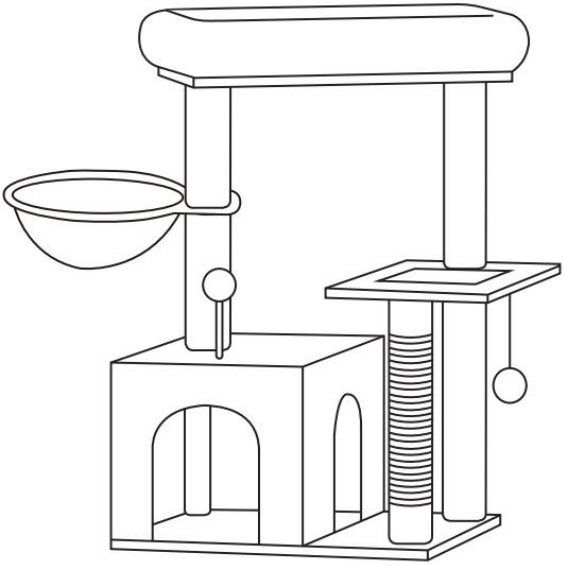

PRODUCT PARAMETER

Model	**KAT789**
Kolor	Jasnoszary lub Głęboki Szary
Typ	4 piętra z 1 domem dla kota
Materiał	Płyta wiórowa, kolumna z rurki papierowej, plusz, sizal

Producent : Shanghaimuxinmuyeyouxiangongsi
Adres: Shuangchenglu 803nong11hao1602A-1609shi, baoshanqu, szanghaj 200000 CN.
Import do AUS: SIHAO PTY LTD. 1 ROKEVA STREETEASTWOOD NSW 2122 Australia
Import do USA: Sanven Technology Ltd. Suite 250, 9166 Anaheim Place, Rancho Cucamonga, CA 91730

EC	REP

E-CrossStu GmbH
Mainzer Landstr.69, 60329 Frankfurt am Main.

UK	REP

YH CONSULTING LIMITED.
C/O YH Consulting Limited Office 147, Centurion House,
London Road, Staines-upon-Thames, Surrey, TW18 4AX

VEVOR®

TOUGH TOOLS, HALF PRICE

Techniczny Certyfikat wsparcia i e-gwarancji

www.vevor.com/support

VEVOR®

TOUGH TOOLS, HALF PRICE

Technisch Support und E-Garantie-Zertifikat www.vevor.com/support

KATZENBÄUME IN SÄULENFORM

Benutzerhandbuch

We continue to be committed to provide you tools with competitive price.
"Save Half", "Half Price" or any other similar expressions used by us only represents an estimate of savings you might benefit from buying certain tools with us compared to the major top brands and does not necessarily mean to cover all categories of tools offered by us. You are kindly reminded to verify carefully when you are placing an order with us if you are actually saving half in comparison with the top major brands.

VEVOR®

TOUGH TOOLS, HALF PRICE

PILLAR TYPE CAT TREES

MODELL: CAT789

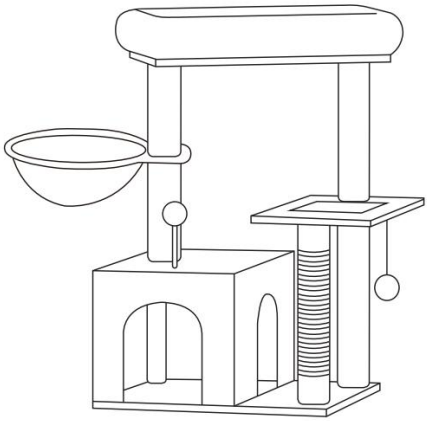

NEED HELP? CONTACT US!

Have product questions? Need technical support? Please feel free to contact us:

Technical Support and E-Warranty Certificate
www.vevor.com/support

This is the original instruction, please read all manual instructions carefully before operating. VEVOR reserves a clear interpretation of our user manual. The appearance of the product shall be subject to the product you received. Please forgive us that we won't inform you again if there are any technology or software updates on our product.

SAFETY INSTRUCTIONS

WARNUNG:

Lesen Sie diese Anweisungen vor der Verwendung dieses Produkts sorgfältig durch. Andernfalls kann es zu schweren Verletzungen kommen.

Vorsichtsmaßnahmen bei der Montage

17. Die Montage darf nur gemäß dieser Anleitung erfolgen. Eine unsachgemäße Montage kann zu Gefahren führen.
18. Tragen Sie während der Montage eine ANSI-geprüfte Schutzbrille und robuste Arbeitshandschuhe.
19. Halten Sie den Versammlungsbereich sauber und gut beleuchtet.
20. Halten Sie während der Montage unbeteiligte Zuschauer vom Bereich fern.
21. Nicht zusammenbauen, wenn Sie müde sind oder unter dem Einfluss von Alkohol, Drogen oder Medikamenten stehen.
22. Die Produktfunktionen gelten nur für ordnungsgemäß und vollständig montierte Produkte.
23. Montieren Sie es auf einer flachen, ebenen, harten und glatten Oberfläche, auf der die Katzenbäume in Säulenform sicher stehen können.
24. Weitere Informationen zu den auf den folgenden Seiten aufgeführten Teilen finden Sie im Montagediagramm dieses Handbuchs. Packen Sie alle Teile in einem sauberen Arbeitsbereich aus und trennen Sie sie.

Vorsichtsmaßnahmen treffen

11. Dieses Produkt ist kein Spielzeug. Erlauben Sie Kindern nicht, mit diesem Produkt oder in dessen Nähe zu spielen.
12. Die Gewichtskapazität darf nicht überschritten werden.
13. Nur auf einer flachen, ebenen, harten und glatten Oberfläche verwenden, die einen voll beladenen Katzenbaum vom Säulentyp sicher tragen kann.
14. Nur bestimmungsgemäß verwenden.
15. Vor jedem Gebrauch prüfen; nicht verwenden, wenn Teile lose oder beschädigt sind.

ANLEITUNG AUFBEWAHREN

PARTS LIST

1		1pc		9		2pcs	21.5cm
2		1pc		10		4pcs	27cm
3		1pc		11		1pc	
4		1pc		A		14pcs	M8*35mm
5		1pc		B		2pcs	M8*80mm
6		1pc	39cm	C		1pc	
7		1pc	39cm				
8		1pc	31cm				

ASSEMBLY STEP

Schritt 1: Installieren Sie 10 zur Unterstützung in den vier Ecken von Katzenhaus 1.

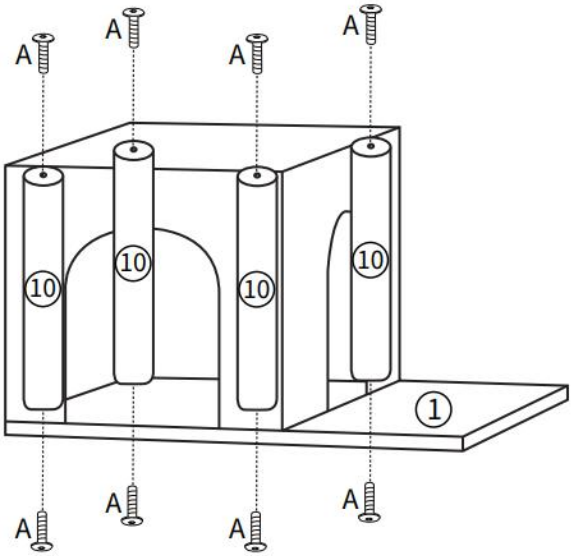

Schritt 2: Installieren Sie 6 und 7 zur Unterstützung an der Außenseite von Katzenhaus 1.

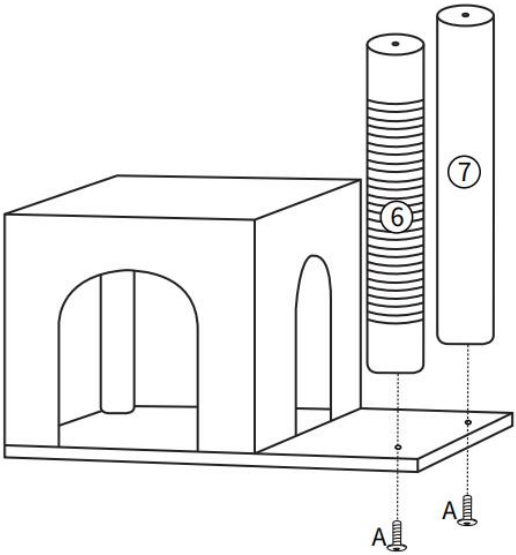

Schritt 3: Installieren Sie 5 und 9 oben am Katzenhaus 1.

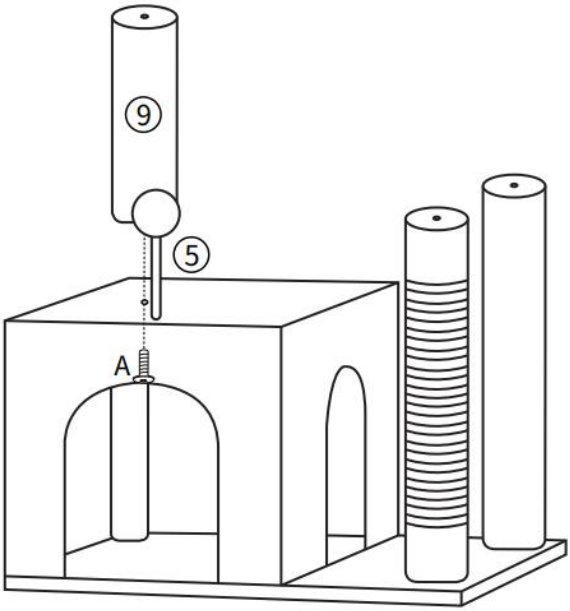

Schritt 4: Installieren Sie 2,3,8,9 wie unten gezeigt.

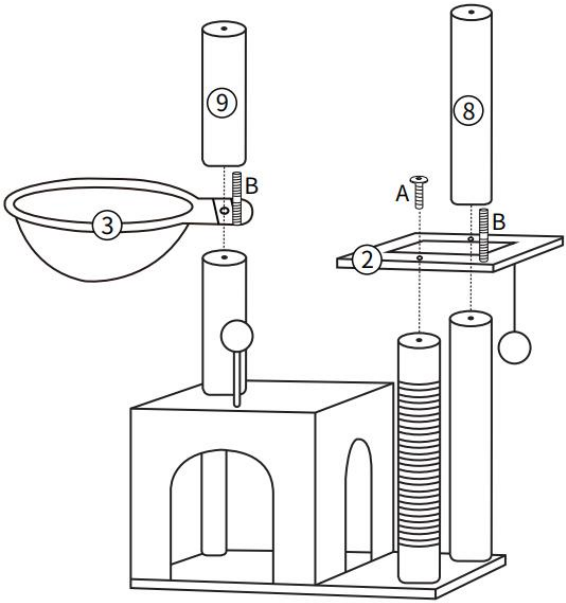

Schritt 5: Installieren Sie abschließend 4 und 11 wie unten beschrieben oben.

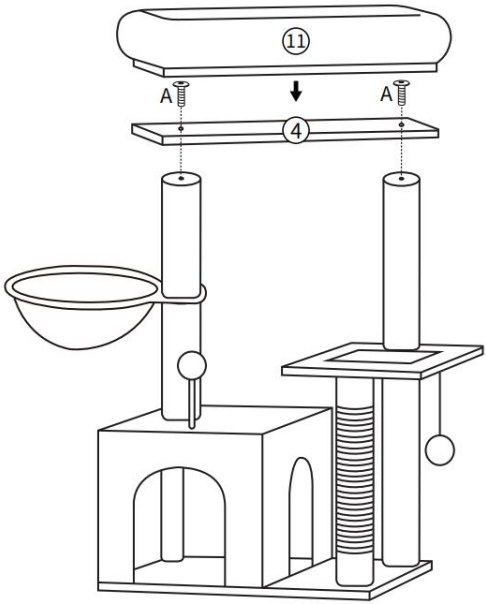

Fertig

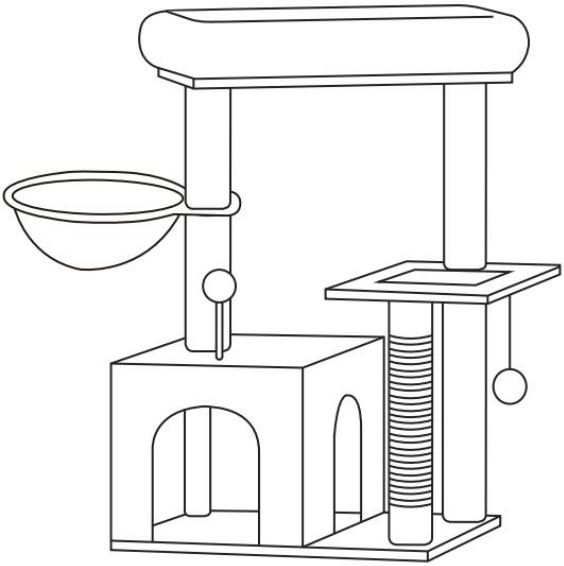

PRODUCT PARAMETER

Modell	**CAT789**
Farbe	Hellgrau oder Dunkelgrau
Typ	4 Etagen mit 1 Katzenhaus
Material	Spanplatte, Papierrohrsäule, Plüsch, Sisal

Hersteller : Shanghaimuxinmuyeyouxiangongsi
Adresse: Shuangchenglu 803nong11hao1602A-1609shi, Baoshanqu, Shanghai 200000 CN.
Nach AUS importiert: SIHAO PTY LTD. 1 ROKEVA STREETEASTWOOD NSW 2122 Australien
Importiert in die USA: Sanven Technology Ltd. Suite 250, 9166 Anaheim Place, Rancho Cucamonga, CA 91730

EC	REP

E-CrossStu GmbH
Mainzer Landstr.69, 60329 Frankfurt am Main.

UK	REP

YH CONSULTING LIMITED.
C/O YH Consulting Limited Office 147, Centurion House,
London Road, Staines-upon-Thames, Surrey, TW18 4AX

VEVOR®

TOUGH TOOLS, HALF PRICE

Technisch Support und E-Garantie-Zertifikat

www.vevor.com/support

VEVOR®

TOUGH TOOLS, HALF PRICE

Technique Assistance et certificat de garantie électronique

www.vevor.com/support

ARBRES À CHAT DE TYPE PILIER

MANUEL DE l' Utilisateur

We continue to be committed to provide you tools with competitive price.
"Save Half", "Half Price" or any other similar expressions used by us only represents an estimate of savings you might benefit from buying certain tools with us compared to the major top brands and does not necessarily mean to cover all categories of tools offered by us. You are kindly reminded to verify carefully when you are placing an order with us if you are actually saving half in comparison with the top major brands.

VEVOR®

TOUGH TOOLS, HALF PRICE

PILLAR TYPE CAT TREES

MODÈLE : CAT789

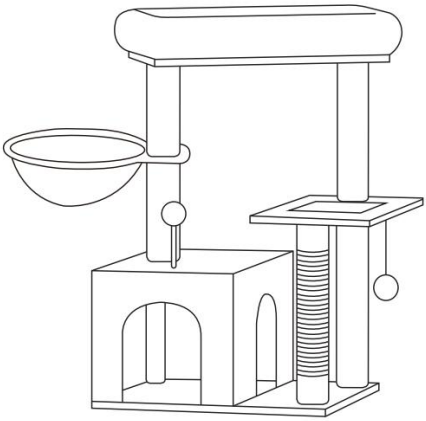

NEED HELP? CONTACT US!

Have product questions? Need technical support? Please feel free to contact us:

Technical Support and E-Warranty Certificate
www.vevor.com/support

This is the original instruction, please read all manual instructions carefully before operating. VEVOR reserves a clear interpretation of our user manual. The appearance of the product shall be subject to the product you received. Please forgive us that we won't inform you again if there are any technology or software updates on our product.

AVERTISSEMENT:
attentivement ces instructions avant d'utiliser ce produit. Ne pas le faire peut entraîner des blessures graves.

Précautions de montage

25. L'assemblage doit uniquement se faire selon ces instructions. Un assemblage incorrect peut entraîner des dangers.
26. Portez des lunettes de sécurité approuvées par l'ANSI et des gants de travail robustes pendant l'assemblage.
27. Gardez la zone de rassemblement propre et bien éclairée.
28. Gardez les spectateurs hors de la zone pendant l'assemblage.
29. Ne vous rassemblez pas lorsque vous êtes fatigué ou sous l’influence de l’alcool, de drogues ou de médicaments.
30. Les capacités du produit s'appliquent uniquement aux produits correctement et complètement assemblés.
31. Assemblez-le sur une surface plane, nivelée, dure et lisse, capable de supporter en toute sécurité les arbres à chat de type pilier.
32. Pour plus d'informations concernant les pièces répertoriées dans les pages suivantes, veuillez vous référer au schéma d'assemblage de ce manuel. Déballez et séparez toutes les pièces dans une zone de travail propre.

Utiliser des précautions

16. Ce produit n'est pas un jouet. Ne laissez pas les enfants jouer avec ou à proximité de cet article.
17. Ne dépassez pas les capacités de poids.
18. Utiliser uniquement sur une surface plane, nivelée, dure et lisse, capable de supporter en toute sécurité un arbre à chat de type pilier entièrement chargé.
19. Utiliser uniquement comme prévu.
20. Inspectez avant chaque utilisation ; ne pas utiliser si les pièces sont

desserrées ou endommagées.

CONSERVEZ CES INSTRUCTIONS

PARTS LIST

1		1pc		9		2pcs	21.5cm
2		1pc		10		4pcs	27cm
3		1pc		11		1pc	
4		1pc		A		14pcs	M8*35mm
5		1pc		B		2pcs	M8*80mm
6		1pc	39cm	C		1pc	
7		1pc	39cm				
8		1pc	31cm				

ASSEMBLY STEP

Étape 1 : installez 10 à l'intérieur des quatre coins de la maison pour chat 1 pour le support.

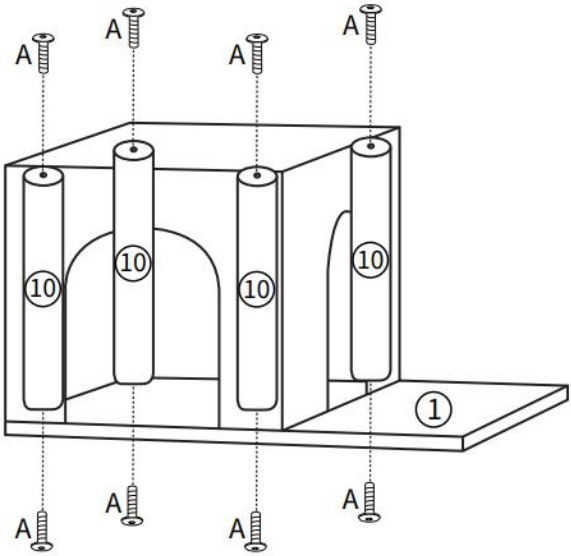

Étape 2 : installez 6 et 7 à l'extérieur de la maison du chat 1 pour être pris en charge.

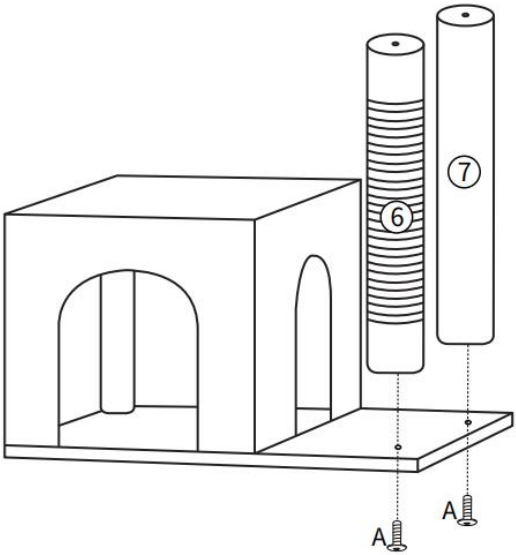

Étape 3 : installez 5 et 9 en haut de la maison du chat 1.

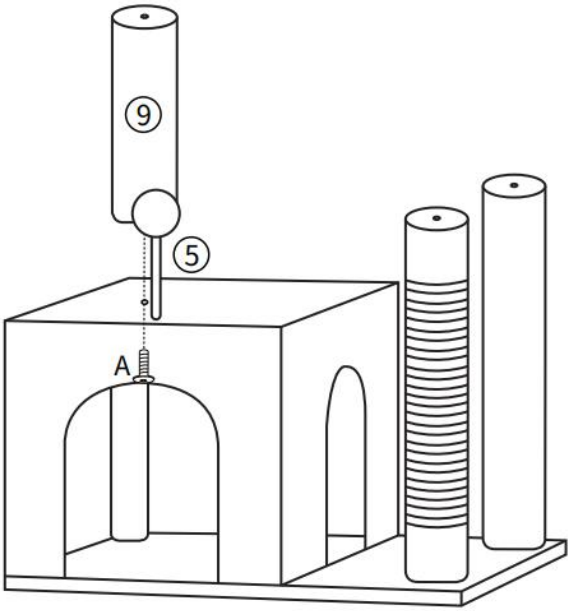

Étape 4 : Installez 2,3,8,9 comme indiqué ci-dessous.

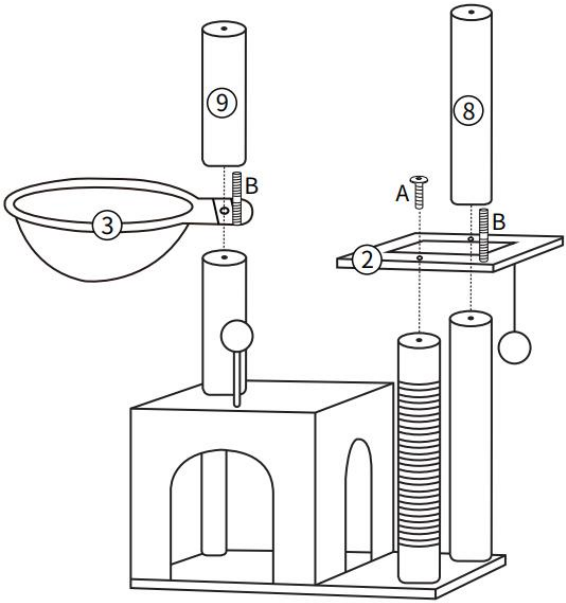

Étape 5 : Enfin, installez 4 et 11 en haut comme ci-dessous.

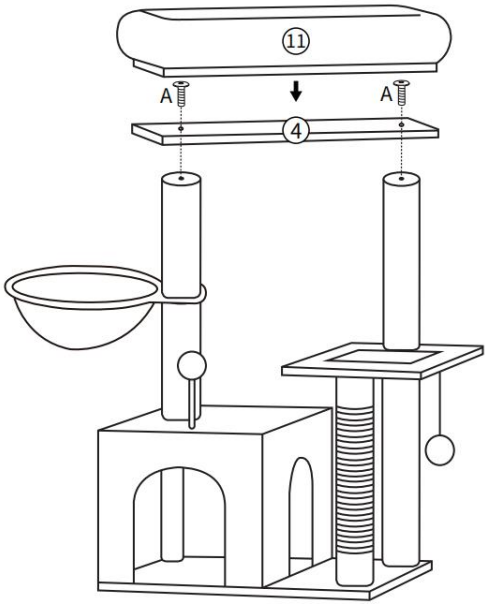

Fini

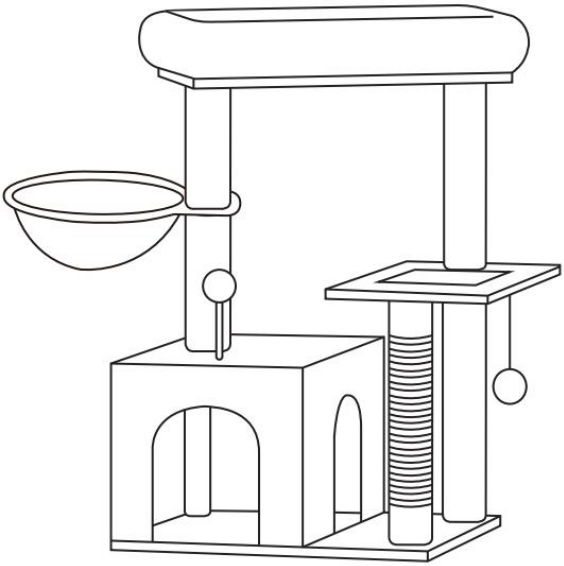

PRODUCT PARAMETER

Modèle	**CAT789**
Couleur	Gris clair ou gris foncé
Taper	4 étages avec 1 maison pour chat
Matériel	Panneau de particules, Colonne en tube de papier, Peluche, Sisal

Fabricant : Shanghaimuxinmuyeyouxiangongsi
Adresse : Shuangchenglu 803nong11hao1602A-1609shi, baoshanqu, Shanghai 200000 CN.
Importé en Australie : SIHAO PTY LTD. 1 ROKEVA STREETASTWOOD NSW 2122 Australie
Importé aux États-Unis : Sanven Technology Ltd. Suite 250, 9166 Anaheim Place, Rancho Cucamonga, CA 91730

EC REP

E-CrossStu GmbH
Mainzer Landstr.69, 60329 Frankfurt am Main.

UK REP

YH CONSULTING LIMITED.
C/O YH Consulting Limited Office 147, Centurion House,
London Road, Staines-upon-Thames, Surrey, TW18 4AX

VEVOR®

TOUGH TOOLS, HALF PRICE

Technique Assistance et certificat de garantie électronique

www.vevor.com/support

VEVOR®

TOUGH TOOLS, HALF PRICE

Technisch Ondersteuning en e-garantiecertificaat www.vevor.com/support

PIJLERTYPE KATTENBOMEN

Handleiding

We continue to be committed to provide you tools with competitive price.
"Save Half", "Half Price" or any other similar expressions used by us only represents an estimate of savings you might benefit from buying certain tools with us compared to the major top brands and does not necessarily mean to cover all categories of tools offered by us. You are kindly reminded to verify carefully when you are placing an order with us if you are actually saving half in comparison with the top major brands.

VEVOR®

TOUGH TOOLS, HALF PRICE

PILLAR TYPE CAT TREES

MODEL: CAT789

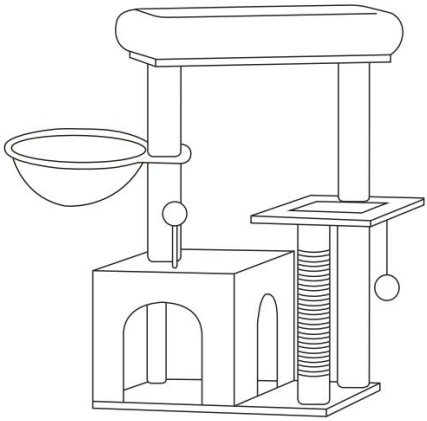

NEED HELP? CONTACT US!

Have product questions? Need technical support? Please feel free to contact us:

Technical Support and E-Warranty Certificate
www.vevor.com/support

This is the original instruction, please read all manual instructions carefully before operating. VEVOR reserves a clear interpretation of our user manual. The appearance of the product shall be subject to the product you received. Please forgive us that we won't inform you again if there are any technology or software updates on our product.

WAARSCHUWING:

Lees deze instructies zorgvuldig door voordat u dit product gebruikt. Als u dit niet doet, kan dit leiden tot ernstig letsel.

Voorzorgsmaatregelen voor montage

33. Alleen de montage dient volgens deze instructies te gebeuren. Onjuiste montage kan tot gevaren leiden.
34. Draag tijdens de montage een ANSI-goedgekeurde veiligheidsbril en stevige werkhandschoenen.
35. Houd de verzamelplaats schoon en goed verlicht.
36. Houd omstanders tijdens de montage uit de buurt.
37. Niet monteren als u moe bent of onder invloed bent van alcohol, drugs of medicijnen.
38. De productmogelijkheden zijn alleen van toepassing op correct en volledig gemonteerde producten.
39. Monteer op een vlakke, vlakke, harde en gladde ondergrond die de kattenbomen van het pilaartype veilig kan ondersteunen.
40. Voor aanvullende informatie over de onderdelen die op de volgende pagina's worden vermeld, verwijzen wij u naar het montageschema van deze handleiding. Pak alle onderdelen uit en scheid ze van elkaar op een schone werkplek.

Gebruik voorzorgsmaatregelen

21. Dit product is geen speelgoed. Laat kinderen niet met of in de buurt van dit artikel spelen.
22. Overschrijd de gewichtscapaciteiten niet.
23. Alleen gebruiken op een vlakke, vlakke, harde en gladde ondergrond die een volledig geladen pilaartype kattenboom veilig kan ondersteunen.
24. Alleen gebruiken zoals bedoeld.
25. Inspecteer vóór elk gebruik; niet gebruiken als onderdelen los of beschadigd zijn.

BEWAAR DEZE INSTRUCTIES

PARTS LIST

1		1pc		9		2pcs	21.5cm
2		1pc		10		4pcs	27cm
3		1pc		11		1pc	
4		1pc		A		14pcs	M8*35mm
5		1pc		B		2pcs	M8*80mm
6		1pc	39cm	C		1pc	
7		1pc	39cm				
8		1pc	31cm				

ASSEMBLY STEP

Stap 1: Installeer 10 in de vier hoeken van Cat House 1 voor ondersteuning.

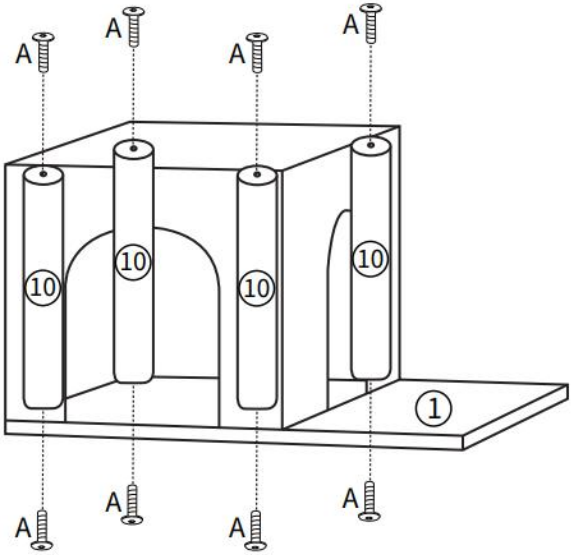

Stap 2: Installeer 6 en 7 aan de buitenkant van kattenhuis 1 voor ondersteuning.

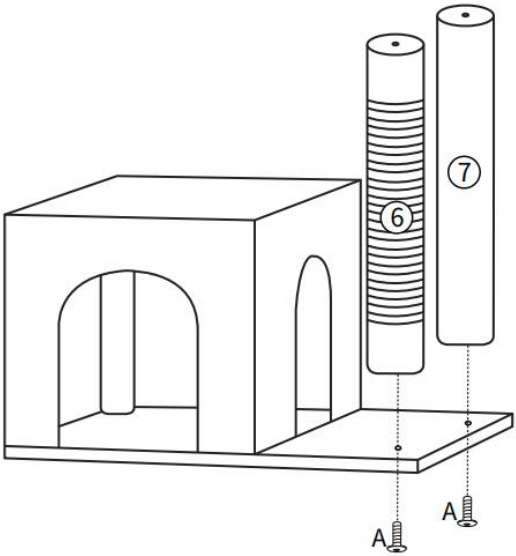

Stap 3: Installeer 5 en 9 op de bovenkant van kattenhuis 1.

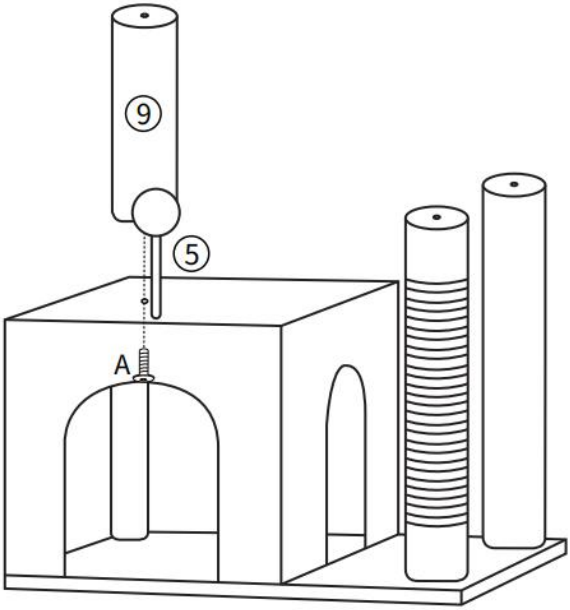

Stap 4: Installeer 2,3,8,9 zoals hieronder weergegeven.

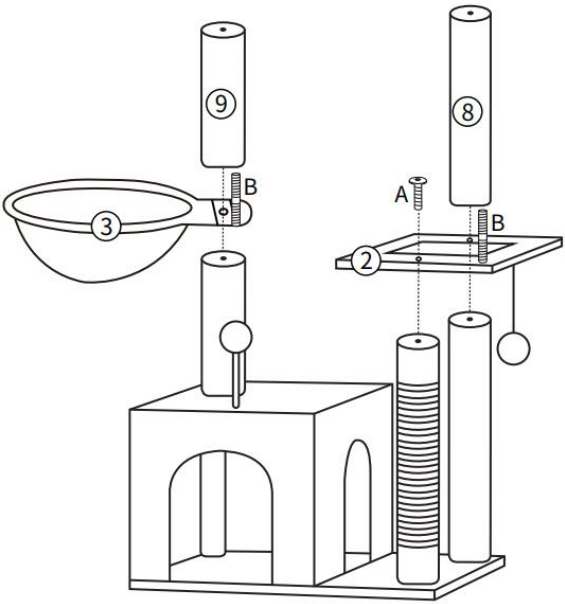

Stap 5: Installeer ten slotte 4 en 11 bovenaan, zoals hieronder.

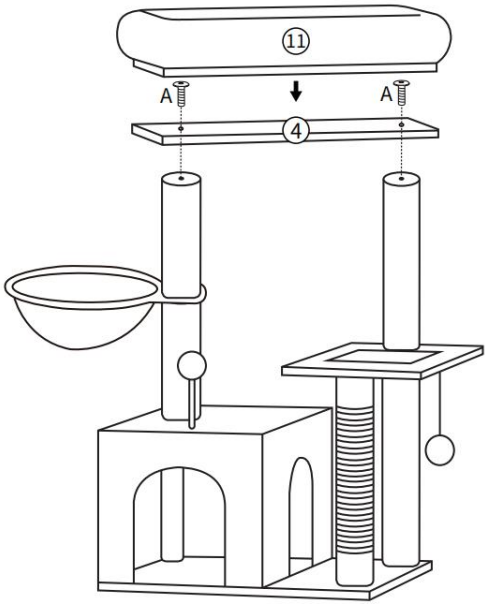

Afgerond

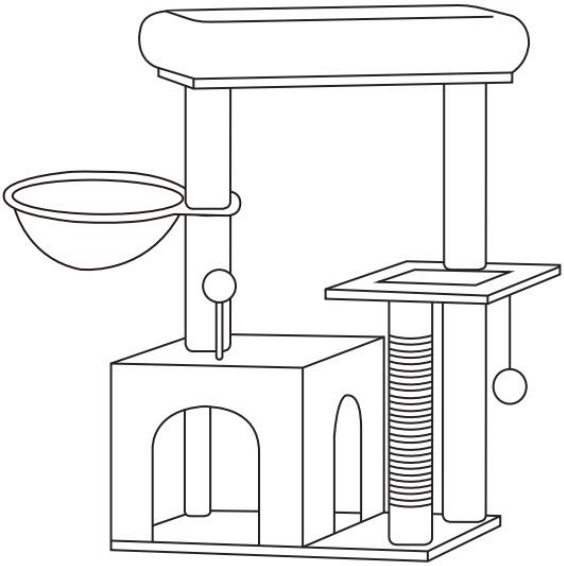

PRODUCT PARAMETER

Model	**CAT789**
Kleur	Lichtgrijs of diepgrijs
Type	4 verdiepingen met 1 kattenhuis
Materiaal	Spaanplaat, kolom van papieren buizen, pluche, sisal

Fabrikant : Shanghaimuxinmuyeyouxiangongsi
Adres: Shuangchenglu 803nong11hao1602A-1609shi, baoshanqu, shanghai 200000 CN.
Geïmporteerd naar AUS: SIHAO PTY LTD. 1 ROKEVA STREETEASTWOOD NSW 2122 Australië
Geïmporteerd naar de VS: Sanven Technology Ltd. Suite 250, 9166 Anaheim Place, Rancho Cucamonga, CA 91730

EC	REP

E-CrossStu GmbH
Mainzer Landstr.69, 60329 Frankfurt am Main.

UK	REP

YH CONSULTING LIMITED.
C/O YH Consulting Limited Office 147, Centurion House,
London Road, Staines-upon-Thames, Surrey, TW18 4AX

VEVOR®

TOUGH TOOLS, HALF PRICE

Technisch Ondersteuning en e-garantiecertificaat

www.vevor.com/support

VEVOR®

TOUGH TOOLS, HALF PRICE

Teknisk Support och e-garanticertifikat www.vevor.com/support

PELARTYP KATTTRÄD

Användarmanual

We continue to be committed to provide you tools with competitive price.
"Save Half", "Half Price" or any other similar expressions used by us only represents an estimate of savings you might benefit from buying certain tools with us compared to the major top brands and does not necessarily mean to cover all categories of tools offered by us. You are kindly reminded to verify carefully when you are placing an order with us if you are actually saving half in comparison with the top major brands.

VEVOR®

TOUGH TOOLS, HALF PRICE

PILLAR TYPE CAT TREES

MODELL: CAT789

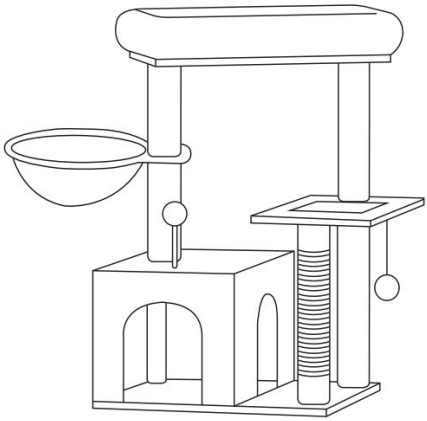

NEED HELP? CONTACT US!

Have product questions? Need technical support? Please feel free to contact us:

Technical Support and E-Warranty Certificate
www.vevor.com/support

This is the original instruction, please read all manual instructions carefully before operating. VEVOR reserves a clear interpretation of our user manual. The appearance of the product shall be subject to the product you received. Please forgive us that we won't inform you again if there are any technology or software updates on our product.

VARNING:

Läs dessa instruktioner noggrant innan du använder denna produkt. Underlåtenhet att göra det kan resultera i allvarliga skador.

Försiktighetsåtgärder vid montering

41. Endast montering ska ske enligt dessa instruktioner. Felaktig montering kan leda till faror.
42. Använd ANSI-godkända skyddsglasögon och kraftiga arbetshandskar vid montering.
43. Håll monteringsområdet rent och väl upplyst.
44. Håll åskådare borta från området under monteringen.
45. Sätt dig inte ihop när du är trött eller påverkad av alkohol, droger eller mediciner.
46. Produktegenskaperna gäller endast för korrekt och färdigmonterade produkter.
47. Montera på en plan, jämn, hård och slät yta som säkert kan stödja kattträden av pelartyp.
48. För ytterligare information om delarna som listas på följande sidor, se monteringsdiagrammet i denna manual. Packa upp och separera alla delar på ett rent arbetsområde.

Använd försiktighetsåtgärder

26. Denna produkt är inte en leksak. Låt inte barn leka med eller nära detta föremål.
27. Överskrid inte viktkapaciteten.
28. Använd endast på en plan, jämn, hård och slät yta som säkert kan stödja en fullastad pelartyp Kattträd.
29. Använd endast som avsett.
30. Inspektera före varje användning; Använd inte om delar är lösa eller skadade.

SPARA DESSA INSTRUKTIONER

PARTS LIST

1		1pc		9		2pcs	21.5cm
2		1pc		10		4pcs	27cm
3		1pc		11		1pc	
4		1pc		A		14pcs	M8*35mm
5		1pc		B		2pcs	M8*80mm
6		1pc	39cm	C		1pc	
7		1pc	39cm				
8		1pc	31cm				

ASSEMBLY STEP

Steg 1: Installera 10 inuti de fyra hörnen av Cat House 1 för stöd.

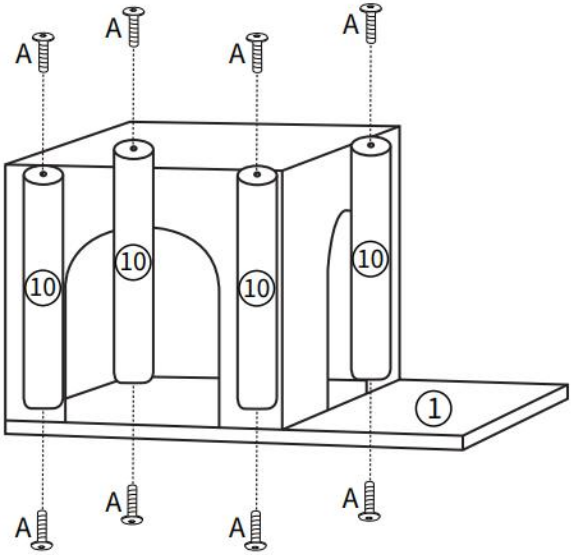

Steg 2: Installera 6 och 7 på utsidan av katthus 1 för stöd.

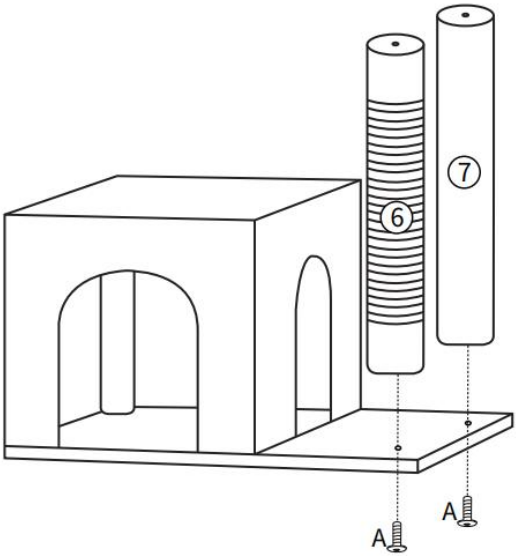

Steg 3: Installera 5 och 9 till toppen av katthuset 1.

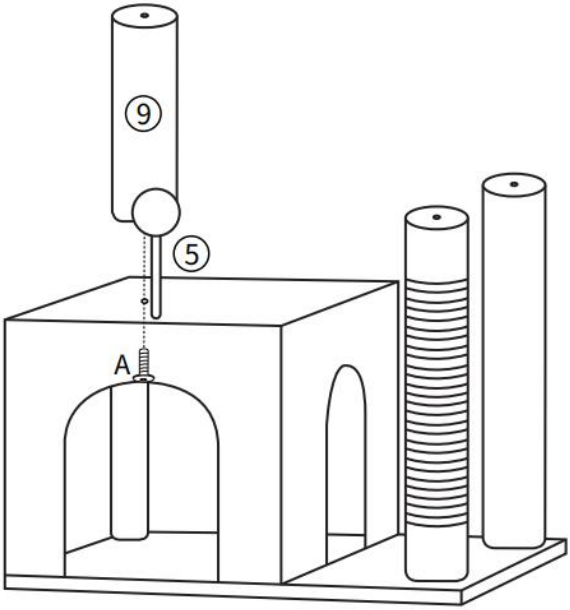

Steg 4: Installera 2,3,8,9 som visas nedan.

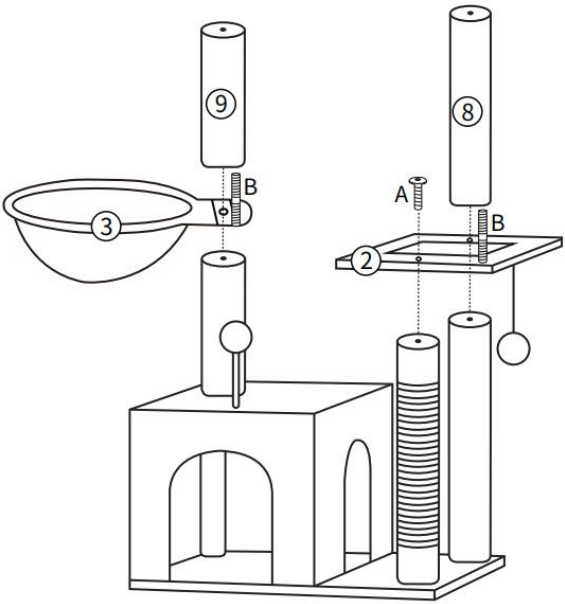

Steg 5: Installera slutligen 4 och 11 till toppen enligt nedan.

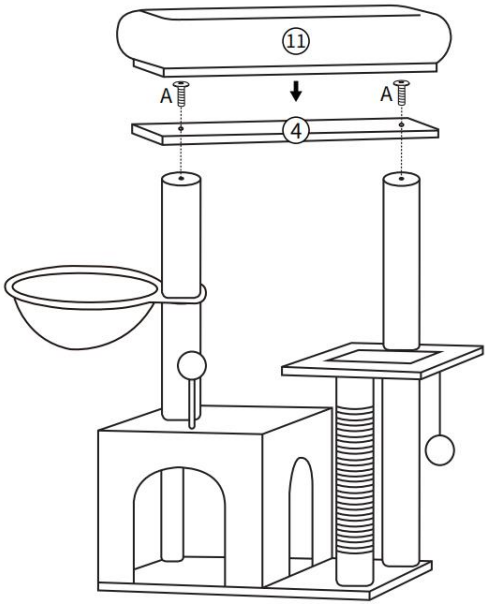

Färdiga

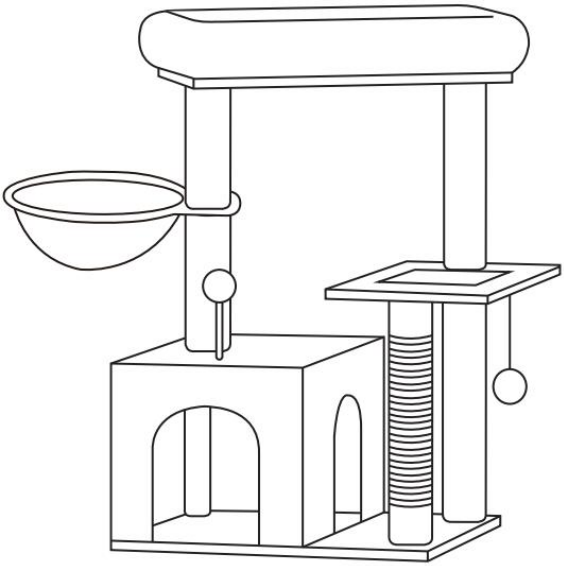

PRODUCT PARAMETER

Modell	**CAT789**
Färg	Ljusgrå eller djupgrå
Typ	4 våningar med 1 katthus
Material	Spånskiva, Pappersrörpelare, Plysch, Sisal

Tillverkare : Shanghaimuxinmuyeyouxiangongsi
Adress: Shuangchenglu 803nong11hao1602A-1609shi, baoshanqu, shanghai 200000 CN.
Importerad till AUS: SIHAO PTY LTD. 1 ROKEVA STREETEASTWOOD NSW 2122 Australien
Importerad till USA: Sanven Technology Ltd. Suite 250, 9166 Anaheim Place, Rancho Cucamonga, CA 91730

EC	REP

E-CrossStu GmbH
Mainzer Landstr.69, 60329 Frankfurt am Main.

UK	REP

YH CONSULTING LIMITED.
C/O YH Consulting Limited Office 147, Centurion House,
London Road, Staines-upon-Thames, Surrey, TW18 4AX

VEVOR®

TOUGH TOOLS, HALF PRICE

Teknisk Support och e-garanticertifikat

www.vevor.com/support

VEVOR®

TOUGH TOOLS, HALF PRICE

Técnico Soporte y certificado de garantía electrónica www.vevor.com/support

ÁRBOLES PARA GATOS TIPO PILAR

de USUARIO

We continue to be committed to provide you tools with competitive price.
"Save Half", "Half Price" or any other similar expressions used by us only represents an estimate of savings you might benefit from buying certain tools with us compared to the major top brands and does not necessarily mean to cover all categories of tools offered by us. You are kindly reminded to verify carefully when you are placing an order with us if you are actually saving half in comparison with the top major brands.

VEVOR®

TOUGH TOOLS, HALF PRICE

PILLAR TYPE CAT TREES

MODELO: CAT789

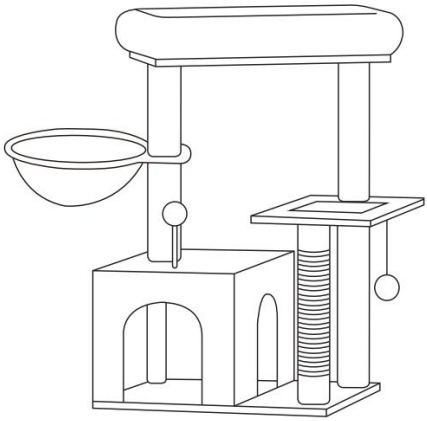

NEED HELP? CONTACT US!

Have product questions? Need technical support? Please feel free to contact us:

Technical Support and E-Warranty Certificate
www.vevor.com/support

This is the original instruction, please read all manual instructions carefully before operating. VEVOR reserves a clear interpretation of our user manual. The appearance of the product shall be subject to the product you received. Please forgive us that we won't inform you again if there are any technology or software updates on our product.

ADVERTENCIA:
atentamente estas instrucciones antes de utilizar este producto. De lo contrario, se pueden producir lesiones graves.

Precauciones de montaje

49. El montaje únicamente debe realizarse de acuerdo con estas instrucciones. Un montaje inadecuado puede provocar peligros.
50. Use gafas de seguridad aprobadas por ANSI y guantes de trabajo resistentes durante el montaje.
51. Mantenga el área de reunión limpia y bien iluminada.
52. Mantenga a los transeúntes fuera del área durante el montaje.
53. No se reúna cuando esté cansado o bajo la influencia de alcohol, drogas o medicamentos.
54. Las capacidades del producto se aplican únicamente a productos ensamblados de manera adecuada y completa.
55. Ensamble sobre una superficie plana, nivelada, dura y lisa capaz de soportar de manera segura los árboles para gatos tipo pilar.
56. Para obtener información adicional sobre las piezas enumeradas en las siguientes páginas, consulte el diagrama de montaje de este manual. Desenvuelva y separe todas las piezas en un área de trabajo limpia.

Use precauciones

31. Este producto no es un juguete. No permita que los niños jueguen con este artículo o cerca de él.
32. No exceda las capacidades de peso.
33. Úselo únicamente sobre una superficie plana, nivelada, dura y lisa capaz de soportar de manera segura un árbol para gatos tipo pilar completamente cargado.
34. Úselo únicamente según lo previsto.
35. Inspeccionar antes de cada uso; no lo utilice si las piezas están sueltas o dañadas.

GUARDA ESTAS INSTRUCCIONES

PARTS LIST

1		1pc		9		2pcs	21.5cm
2		1pc		10		4pcs	27cm
3		1pc		11		1pc	
4		1pc		A		14pcs	M8*35mm
5		1pc		B		2pcs	M8*80mm
6		1pc	39cm	C		1pc	
7		1pc	39cm				
8		1pc	31cm				

ASSEMBLY STEP

Paso 1: Instale 10 dentro de las cuatro esquinas de Cat House 1 para brindar soporte.

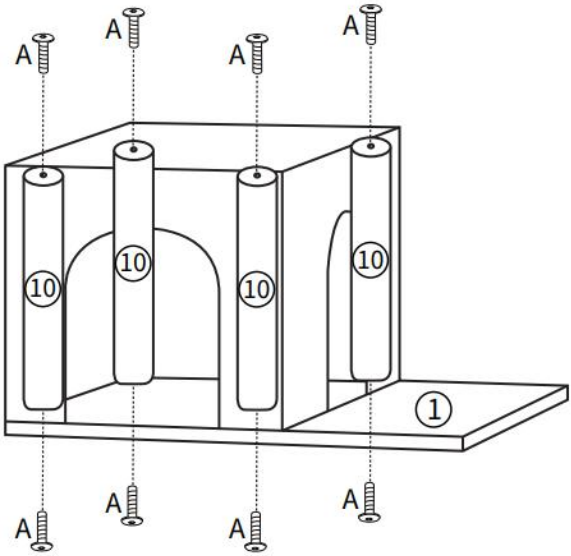

Paso 2: Instale 6 y 7 en el exterior de la Casa 1 para gatos para obtener soporte.

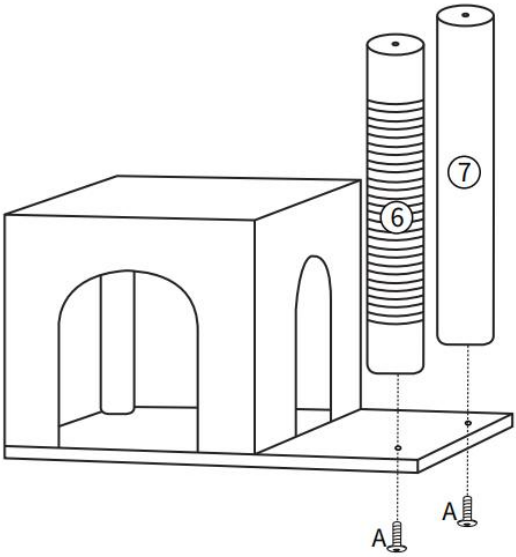

Paso 3: Instale 5 y 9 en la parte superior de la casa para gatos 1.

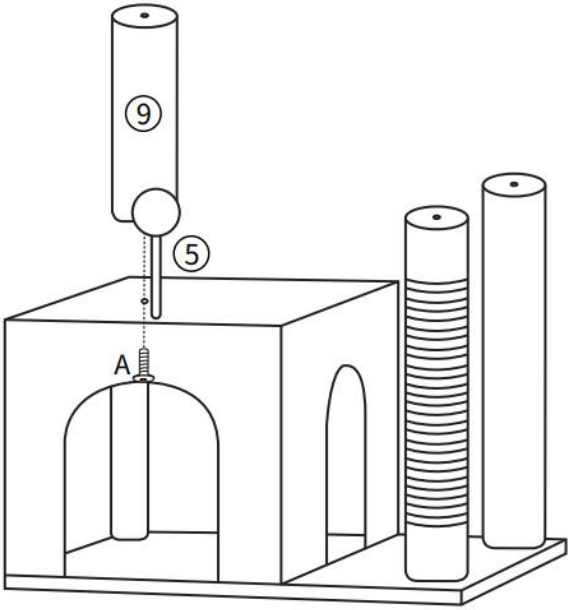

Paso 4: Instale 2,3,8,9 como se muestra a continuación.

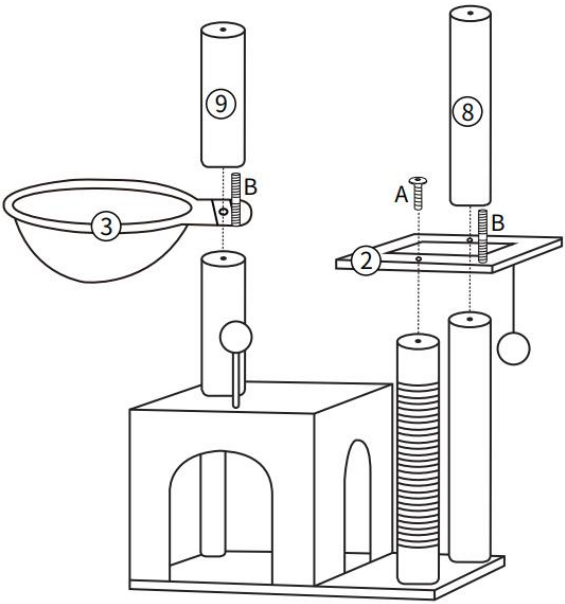

Paso 5: Finalmente instale 4 y 11 en la parte superior como se muestra a continuación.

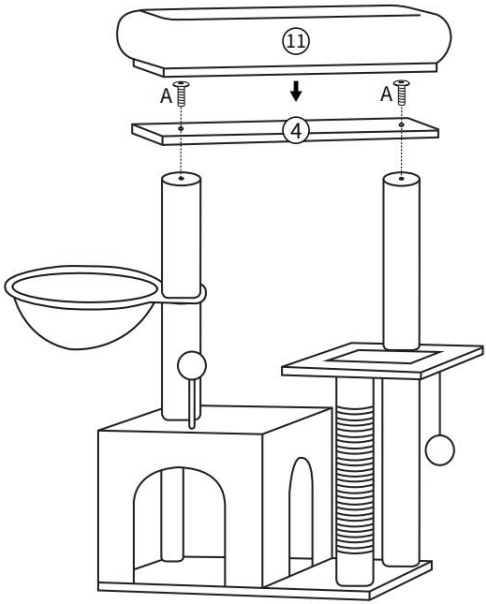

Finalizado

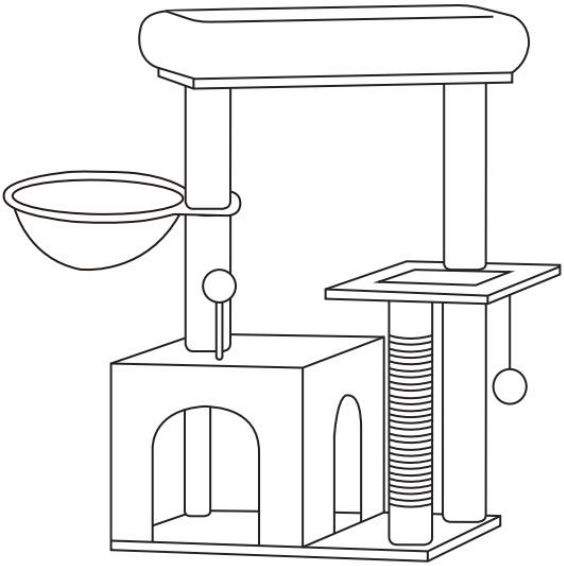

PRODUCT PARAMETER

Modelo	**CAT789**
Color	Gris claro o gris oscuro
Tipo	4 pisos con 1 casa para gatos
Material	Tablero de partículas, Columna de tubo de papel, Felpa, Sisal

Fabricante : Shanghaimuxinmuyeyouxiangongsi
Dirección: Shuangchenglu 803nong11hao1602A-1609shi, baoshanqu, shanghai 200000 CN.
Importado a AUS: SIHAO PTY LTD. 1 ROKEVA STREET ASTWOOD NSW 2122 Australia
Importado a EE. UU.: Sanven Technology Ltd. Suite 250, 9166 Anaheim Place, Rancho Cucamonga, CA 91730

EC REP

E-CrossStu GmbH
Mainzer Landstr.69, 60329 Frankfurt am Main.

UK REP

YH CONSULTING LIMITED.
C/O YH Consulting Limited Office 147, Centurion House,
London Road, Staines-upon-Thames, Surrey, TW18 4AX

VEVOR®

TOUGH TOOLS, HALF PRICE

Técnico Certificado de soporte y garantía electrónica

www.vevor.com/support

VEVOR®

TOUGH TOOLS, HALF PRICE

Tecnico Supporto e certificato di garanzia elettronica www.vevor.com/support

TIRAGRAFFI PER GATTI A COLONNA

MANUALE D' uso

We continue to be committed to provide you tools with competitive price.
"Save Half", "Half Price" or any other similar expressions used by us only represents an estimate of savings you might benefit from buying certain tools with us compared to the major top brands and does not necessarily mean to cover all categories of tools offered by us. You are kindly reminded to verify carefully when you are placing an order with us if you are actually saving half in comparison with the top major brands.

VEVOR®

TOUGH TOOLS, HALF PRICE

PILLAR TYPE CAT TREES

MODELLO: CAT789

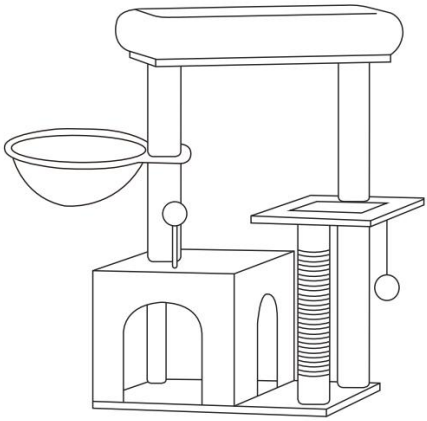

NEED HELP? CONTACT US!

Have product questions? Need technical support? Please feel free to contact us:

Technical Support and E-Warranty Certificate
www.vevor.com/support

This is the original instruction, please read all manual instructions carefully before operating. VEVOR reserves a clear interpretation of our user manual. The appearance of the product shall be subject to the product you received. Please forgive us that we won't inform you again if there are any technology or software updates on our product.

AVVERTIMENTO:
Leggere attentamente queste istruzioni prima di utilizzare questo prodotto. In caso contrario si potrebbero causare lesioni gravi.

Precauzioni per il montaggio

57. Solo il montaggio deve avvenire secondo queste istruzioni. Un montaggio improprio può comportare pericoli.
58. Indossare occhiali di sicurezza approvati ANSI e guanti da lavoro pesanti durante il montaggio.
59. Mantenere l'area di assemblaggio pulita e ben illuminata.
60. Tenere gli astanti lontani dall'area durante il montaggio.
61. Non montare in caso di stanchezza o sotto l'effetto di alcol, droghe o farmaci.
62. Le funzionalità del prodotto si applicano solo ai prodotti correttamente e completamente assemblati.
63. Montare su una superficie piana, livellata, dura e liscia in grado di sostenere in sicurezza i tiragraffi a colonna.
64. Per ulteriori informazioni riguardanti le parti elencate nelle pagine seguenti, fare riferimento allo Schema di Montaggio di questo manuale. Scartare e separare tutte le parti in un'area di lavoro pulita.

Usare precauzioni

36. Questo prodotto non è un giocattolo. Non permettere ai bambini di giocare con o vicino a questo oggetto.
37. Non superare le capacità di peso.
38. Utilizzare solo su una superficie piana, livellata, dura e liscia in grado di supportare in sicurezza un tiragraffi a colonna completamente carico.
39. Utilizzare solo come previsto.
40. Ispezionare prima di ogni utilizzo; non utilizzare se le parti sono allentate o danneggiate.

CONSERVARE QUESTE ISTRUZIONI

PARTS LIST

1		1pc		9		2pcs	21.5cm
2		1pc		10		4pcs	27cm
3		1pc		11		1pc	
4		1pc		A		14pcs	M8*35mm
5		1pc		B		2pcs	M8*80mm
6		1pc	39cm	C		1pc	
7		1pc	39cm				
8		1pc	31cm				

ASSEMBLY STEP

Passaggio 1: installarne 10 all'interno dei quattro angoli di Cat House 1 per il supporto.

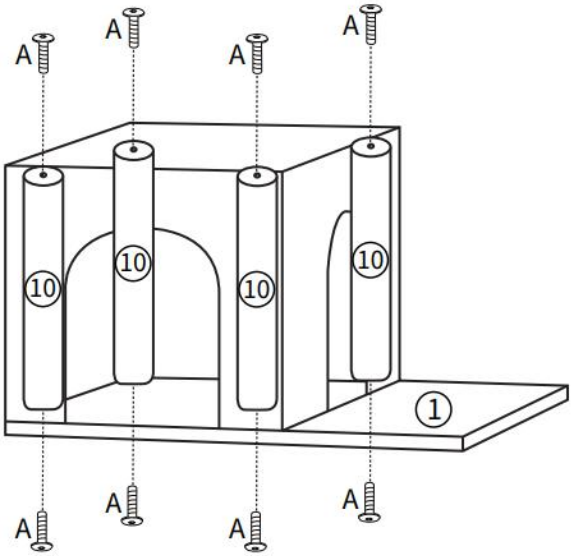

Passaggio 2: installare 6 e 7 all'esterno della Cat House 1 per il supporto.

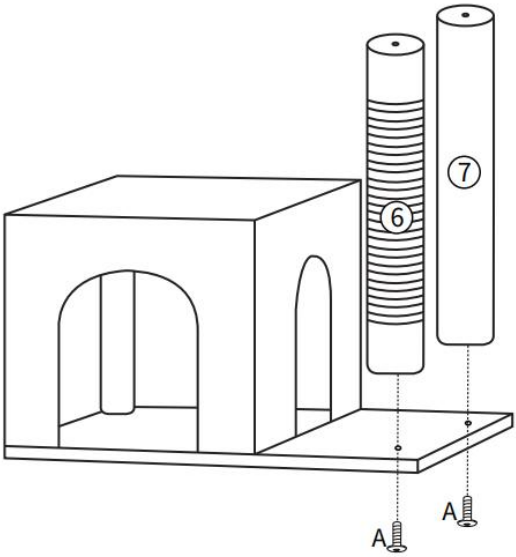

Passaggio 3: installare 5 e 9 nella parte superiore della casetta per gatti 1.

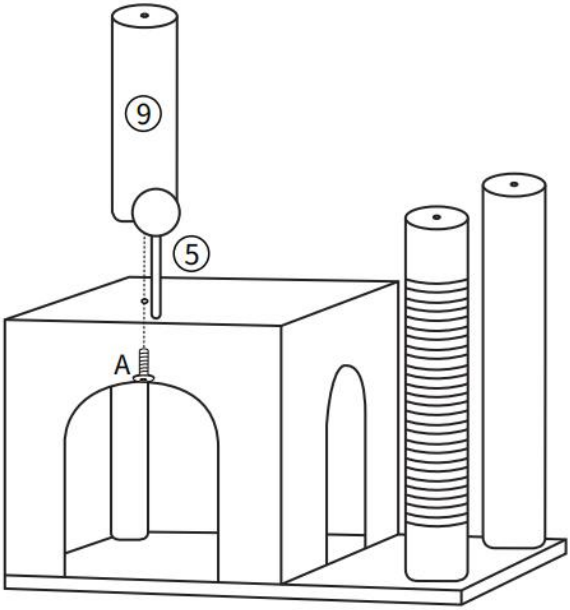

Passaggio 4: installare 2,3,8,9 come mostrato di seguito.

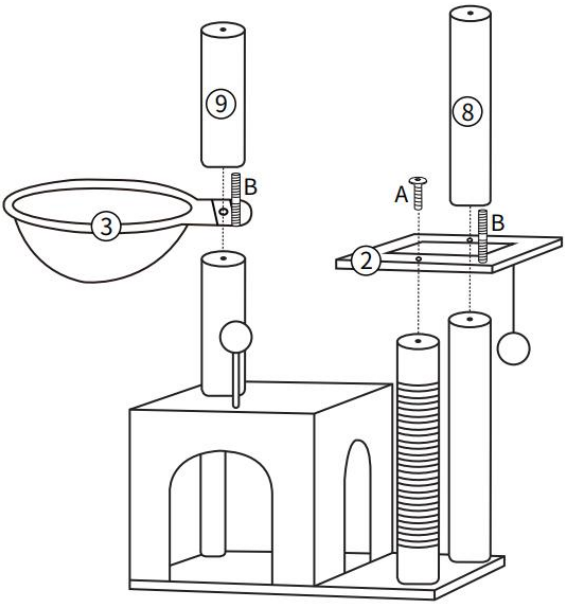

Passaggio 5: infine installare 4 e 11 in alto come di seguito.

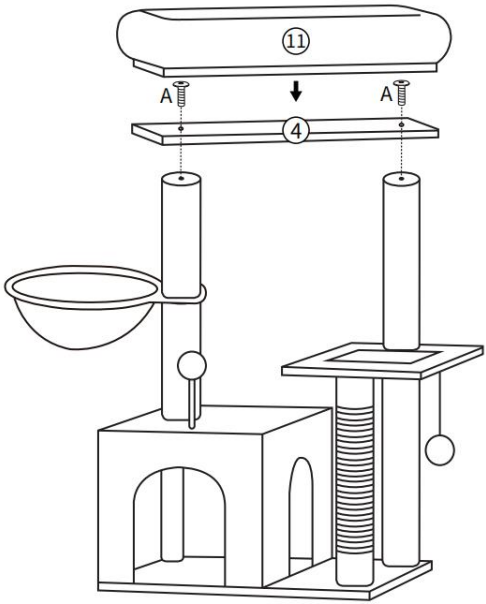

Finito

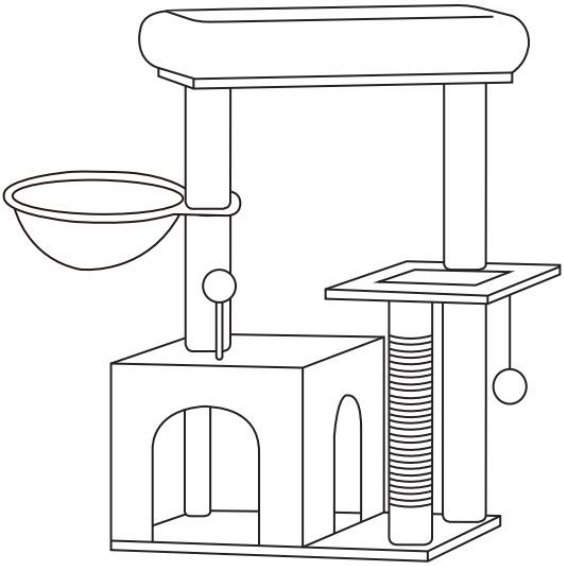

PRODUCT PARAMETER

Modello	**CAT789**
Colore	Grigio chiaro o grigio intenso
Tipo	4 piani con 1 cuccia per gatti
Materiale	Truciolare, Colonna in tubo di carta, Peluche, Sisal

Produttore : Shanghaimuxinmuyeyouxiangongsi
Indirizzo: Shuangchenglu 803nong11hao1602A-1609shi, baoshanqu, shanghai 200000 CN.
Importato in AUS: SIHAO PTY LTD. 1 ROKEVA STREETEASTWOOD NSW 2122 Australia
Importato negli Stati Uniti: Sanven Technology Ltd. Suite 250, 9166 Anaheim Place, Rancho Cucamonga, CA 91730

EC	REP

E-CrossStu GmbH
Mainzer Landstr.69, 60329 Frankfurt am Main.

UK	REP

YH CONSULTING LIMITED.
C/O YH Consulting Limited Office 147, Centurion House,
London Road, Staines-upon-Thames, Surrey, TW18 4AX

VEVOR®

TOUGH TOOLS, HALF PRICE

Tecnico Supporto e certificato di garanzia elettronica

www.vevor.com/support