VEVOR®

TOUGH TOOLS, HALF PRICE

Technical Support and E-Warranty Certificate www.vevor.com/support

SALON STATION

USER MANUAL

We continue to be committed to provide you tools with competitive price.
"Save Half", "Half Price" or any other similar expressions used by us only represents an estimate of savings you might benefit from buying certain tools with us compared to the major top brands and does not necessarily mean to cover all categories of tools offered by us. You are kindly reminded to verify carefully when you are placing an order with us if you are actually saving half in comparison with the top major brands.

VEVOR®

TOUGH TOOLS, HALF PRICE

SALON STATION

MODEL:WC1001

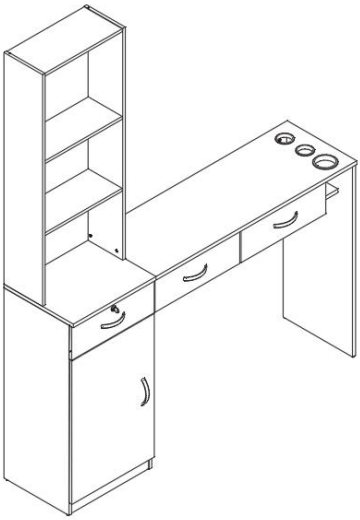

NEED HELP? CONTACT US!

Have product questions? Need technical support? Please feel free to contact us:

Technical Support and E-Warranty Certificate
www.vevor.com/support

This is the original instruction, please read all manual instructions carefully before operating. VEVOR reserves a clear interpretation of our user manual. The appearance of the product shall be subject to the product you received. Please forgive us that we won't inform you again if there are any technology or software updates on our product.

SAFETY INSTRUCTIONS

WARNING:

Read this instructions carefully before using this product. Failure to do so can result in serious injury.

Assembly precautions

1. Assemble only should be according to these instructions. Improper assembly can result in hazards.
2. Wear ANSI-approved safety goggles and heavy-duty work gloves during assembly.
3. Keep the assembly area clean and well-lit.
4. Keep bystanders out of the area during assembly.
5. Do not assemble when tired or when under the influence of alcohol, drugs or medication.
6. The product capabilities apply to properly and completely assembled products only.
7. Assemble on a flat, level, hard and smooth surface capable of safely supporting the Salon Station.
8. For additional information regarding the parts listed in the following pages, please refer to the Assembly Diagram of this manual. Unwrap and separate all parts in a clean work area.

Use precautions

1. DO NOT SIT OR STAND ON THIS ITEM.
2. This product is not a toy. Do not allow children to play with or near this item.
3. Do not exceed weight capacities.
4. Use only on a flat, level, hard and smooth surface capable of safely supporting a fully loaded Salon Station.
5. Use as intended only.
6. Inspect before every use; do not use if parts are loose or damaged.

SAVE THESE INSTRUCTIONS

PARTS LIST

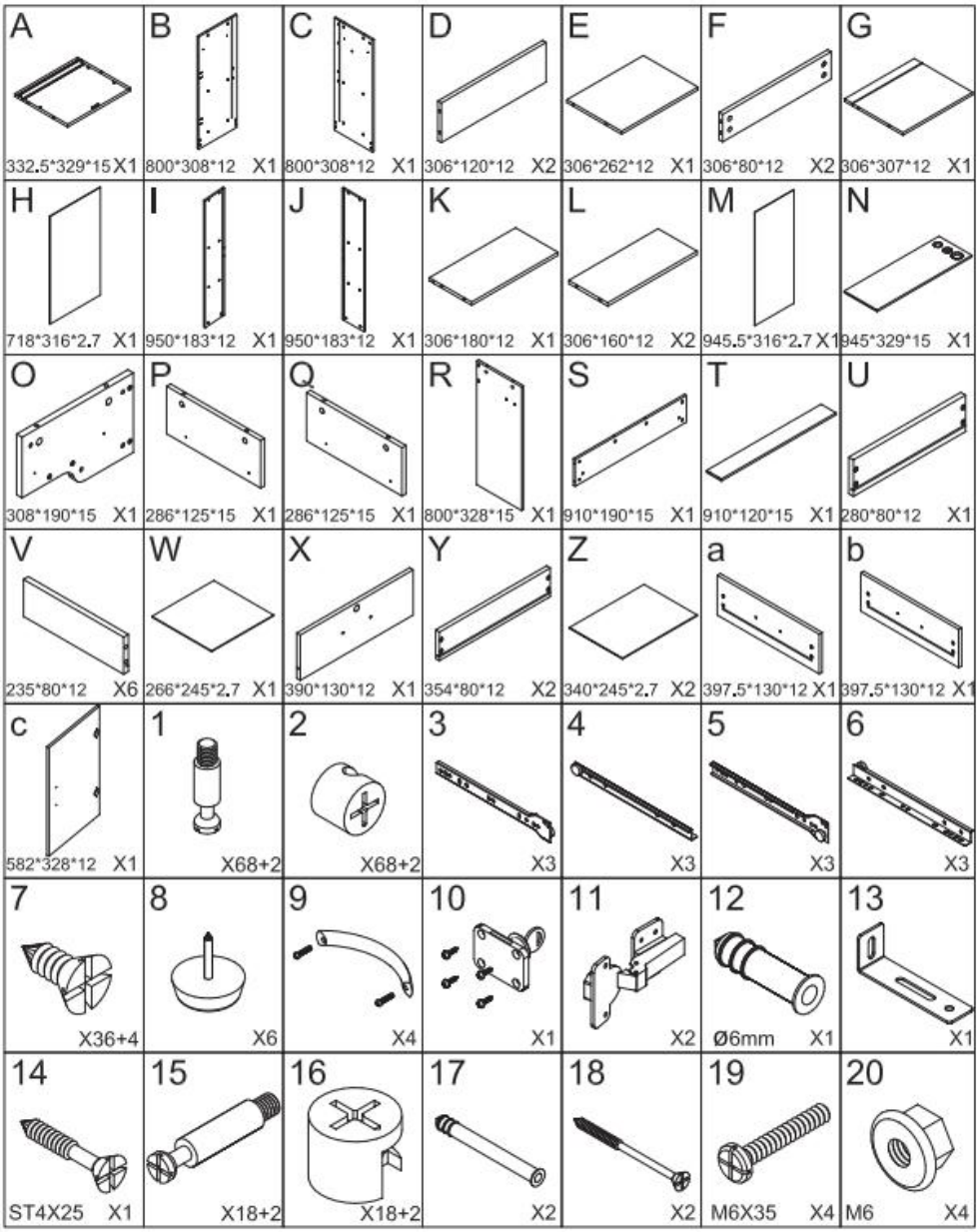
A
332.5*329*15 X1
B
800*308*12 X1
C
800*308*12 X1
D
306*120*12 X2
E
306*262*12 X1
F
306*80*12 X2
G
306*307*12 X1
H
718*316*2.7 X1
I
950*183*12 X1
J
950*183*12 X1
K
306*180*12 X1
L
306*160*12 X2
M
945.5*316*2.7 X1
N
945*329*15 X1
O
308*190*15 X1
P
286*125*15 X1
Q
286*125*15 X1
R
800*328*15 X1
S
910*190*15 X1
T
910*120*15 X1
U
280*80*12 X1
V
235*80*12 X6
W
266*245*2.7 X1
X
390*130*12 X1
Y
354*80*12 X2
Z
340*245*2.7 X2
a
397.5*130*12 X1
b
397.5*130*12 X1
c
582*328*12 X1
1
X68+2
2
X68+2
3
X3
4
X3
5
X3
6
X3
7
X36+4
8
X6
9
X4
10
X1
11
X2
12
Ø6mm X1
13
X1
14
ST4X25 X1
15
X18+2
16
X18+2
17
X2
18
X2
19
M6X35 X4
20
M6 X4

ASSEMBLY INSTRUCTION

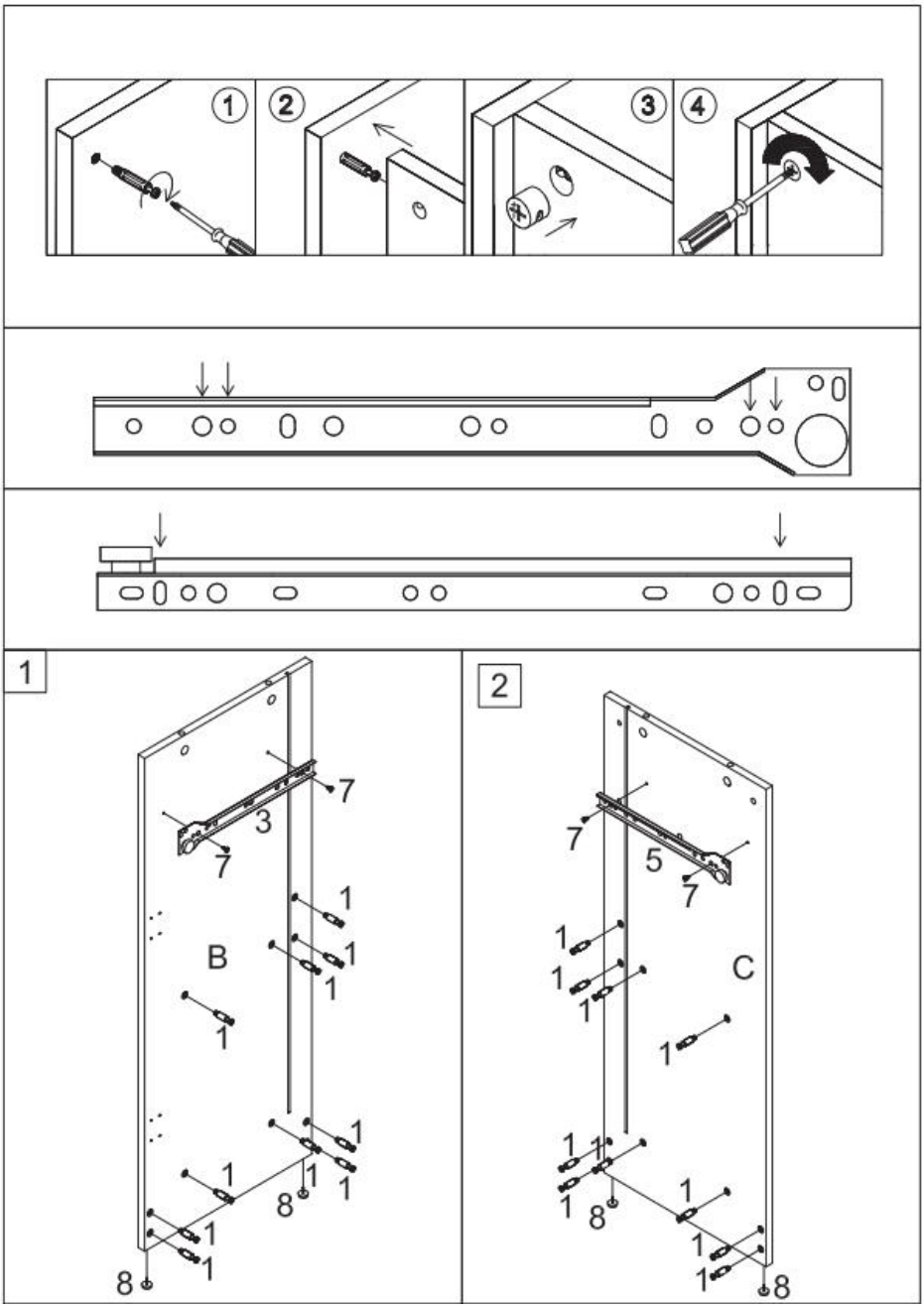

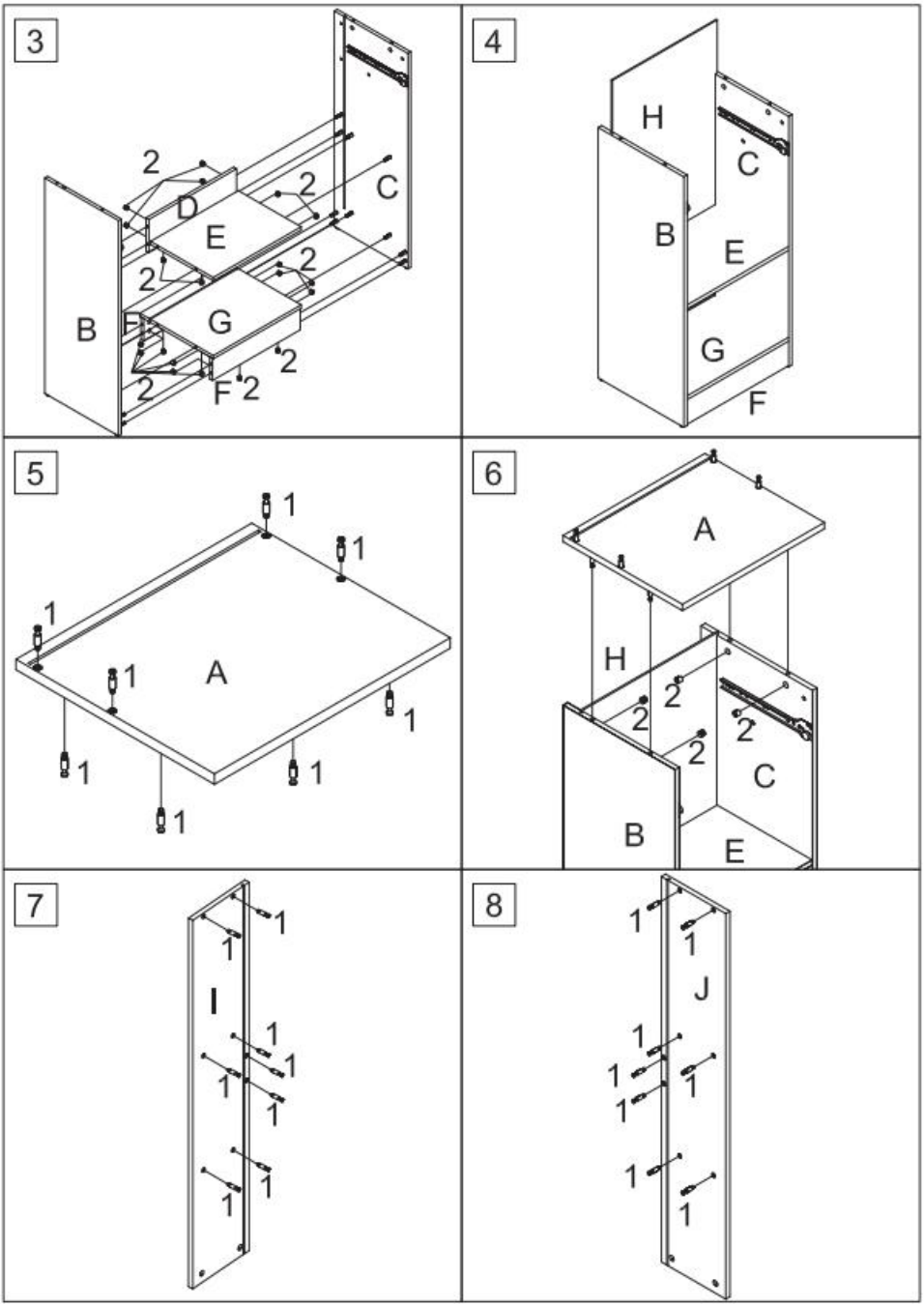
3
2
D
E
2
C
2
2
B
F
G
2
2
F
2
4
H
C
B
E
G
F
5
1
1
1
1
A
1
1
1
1
6
A
H
2
2
2
2
C
B
E
7
1
1
I
1
1
1
1
1
1
8
1
1
J
1
1
1
1
1
1

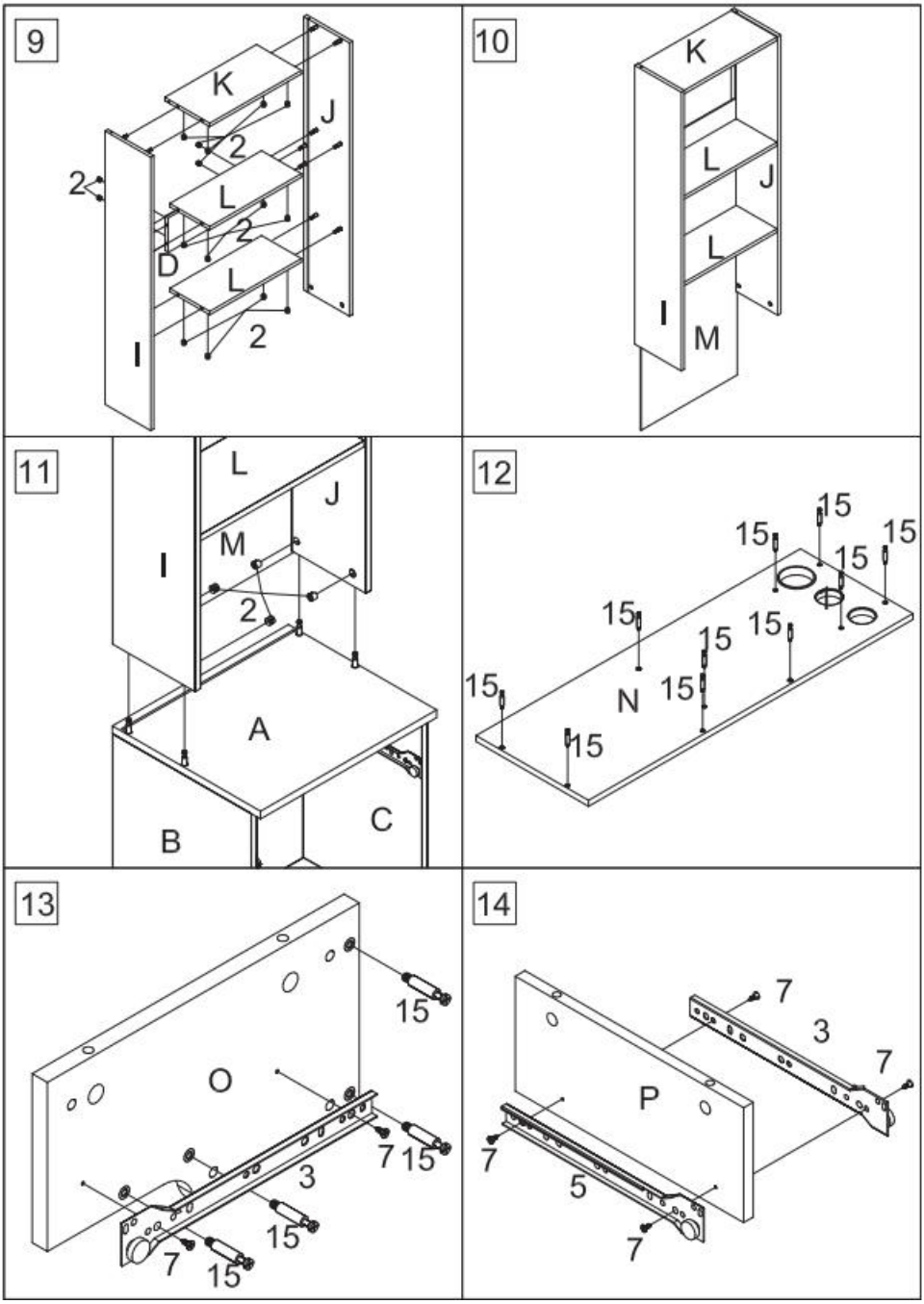
9
K
J
2
2
L
2
D
L
2
I
10
K
L
J
L
I
M
11
L
J
M
I
2
A
B
C
12
15
15
15
15
15
15
15
15
N
15
15
13
15
O
7
15
3
15
7
15
14
7
3
7
P
7
5
7

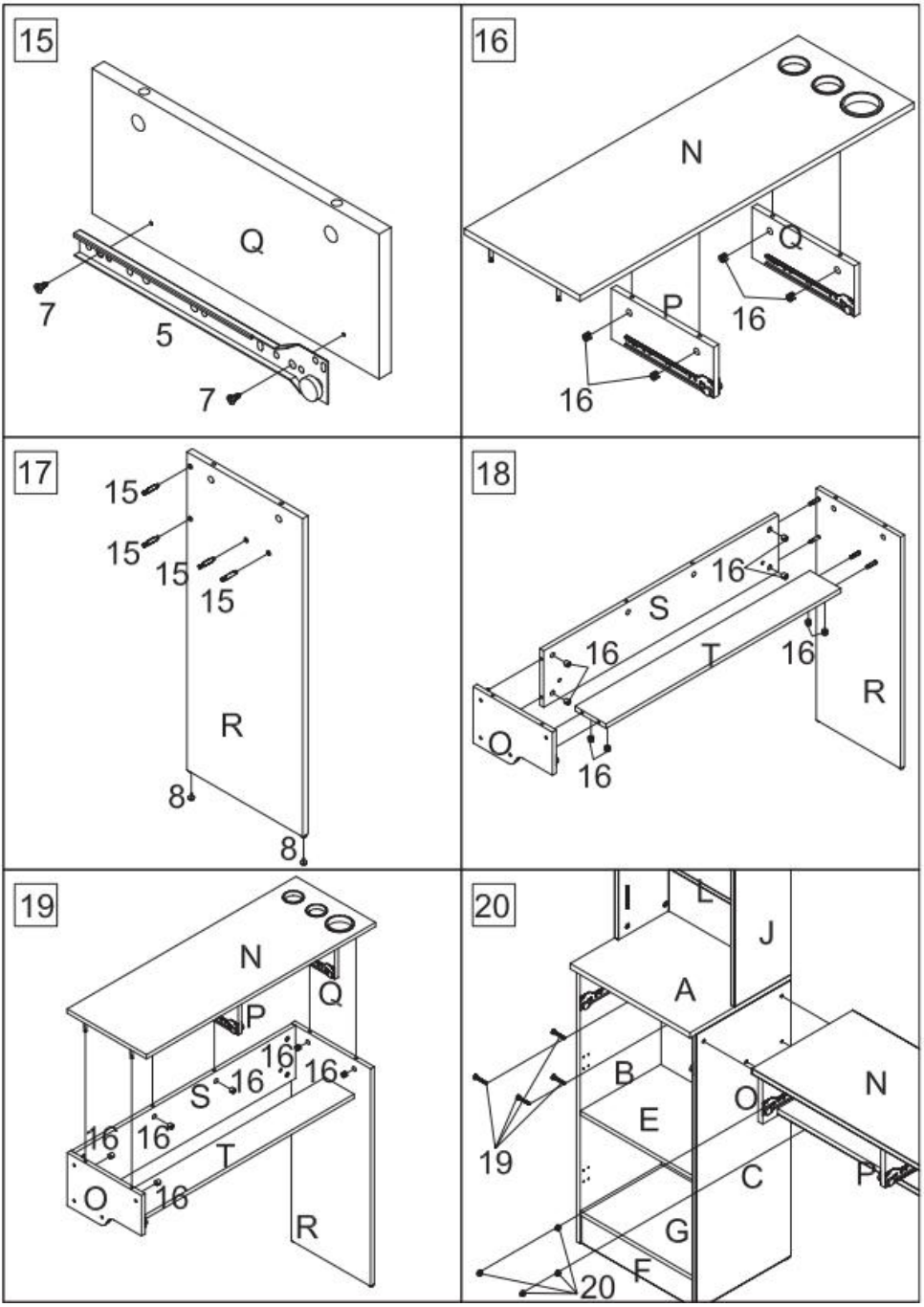
15
Q
7
5
7
16
N
Q
P
16
16
17
15
15
15
15
R
8
8
18
16
S
16
T
16
R
Q
16
19
N
Q
P
16
16
S
16
16
16
T
O
16
R
20
I
L
J
A
B
N
O
E
19
C
P
G
F
20

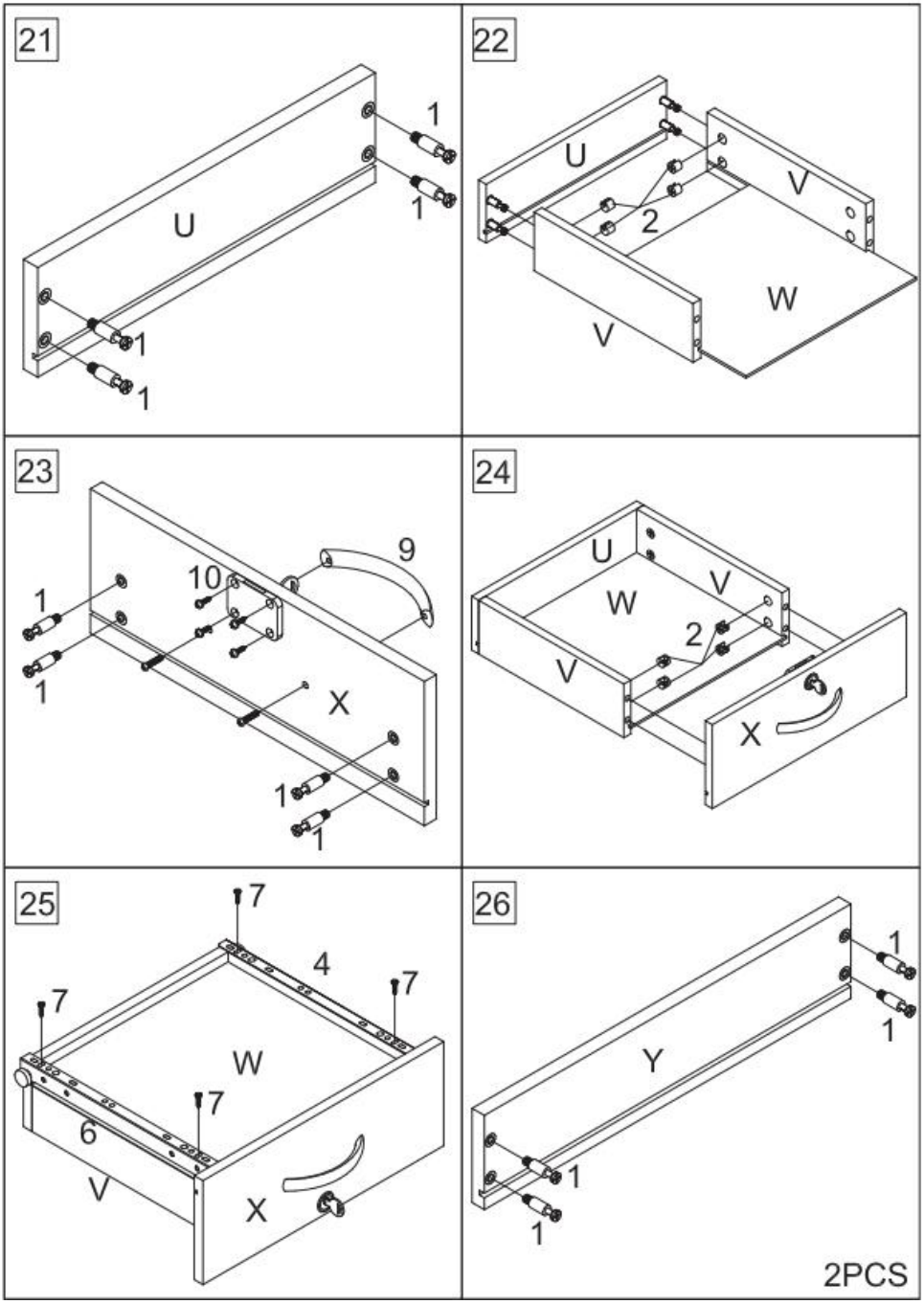
21
U
1
1
1
1
22
U
V
2
W
V
23
9
10
1
1
X
1
1
24
U
V
W
2
V
X
25
7
4
7
7
W
7
6
V
X
26
1
1
Y
1
1
2PCS

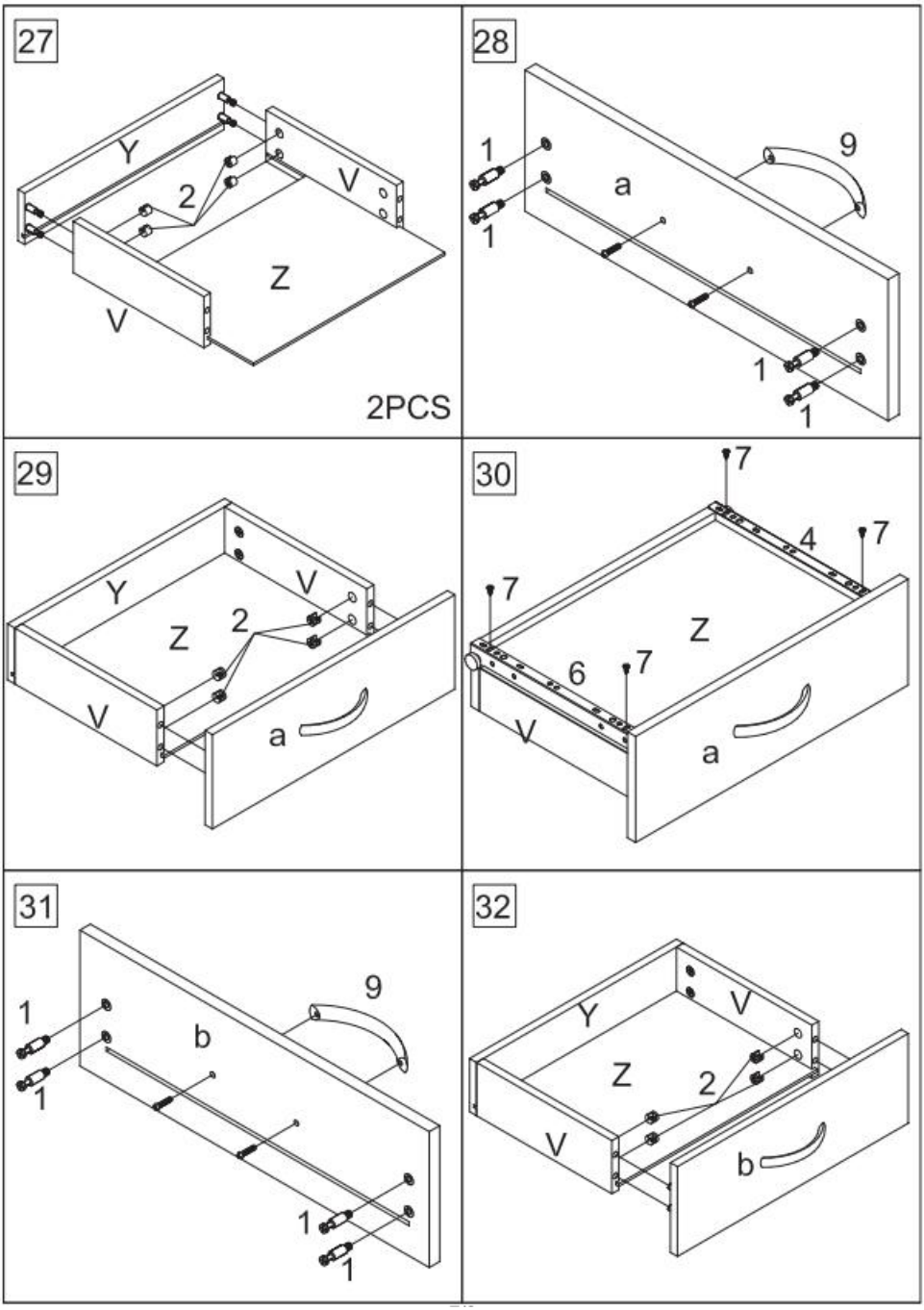
27
Y
2
V
Z
V
2PCS
28
1
9
a
1
1
1
29
Y
V
Z
2
V
a
30
7
4
7
7
Z
6
7
V
a
31
1
9
b
1
1
1
32
Y
V
Z
2
V
b

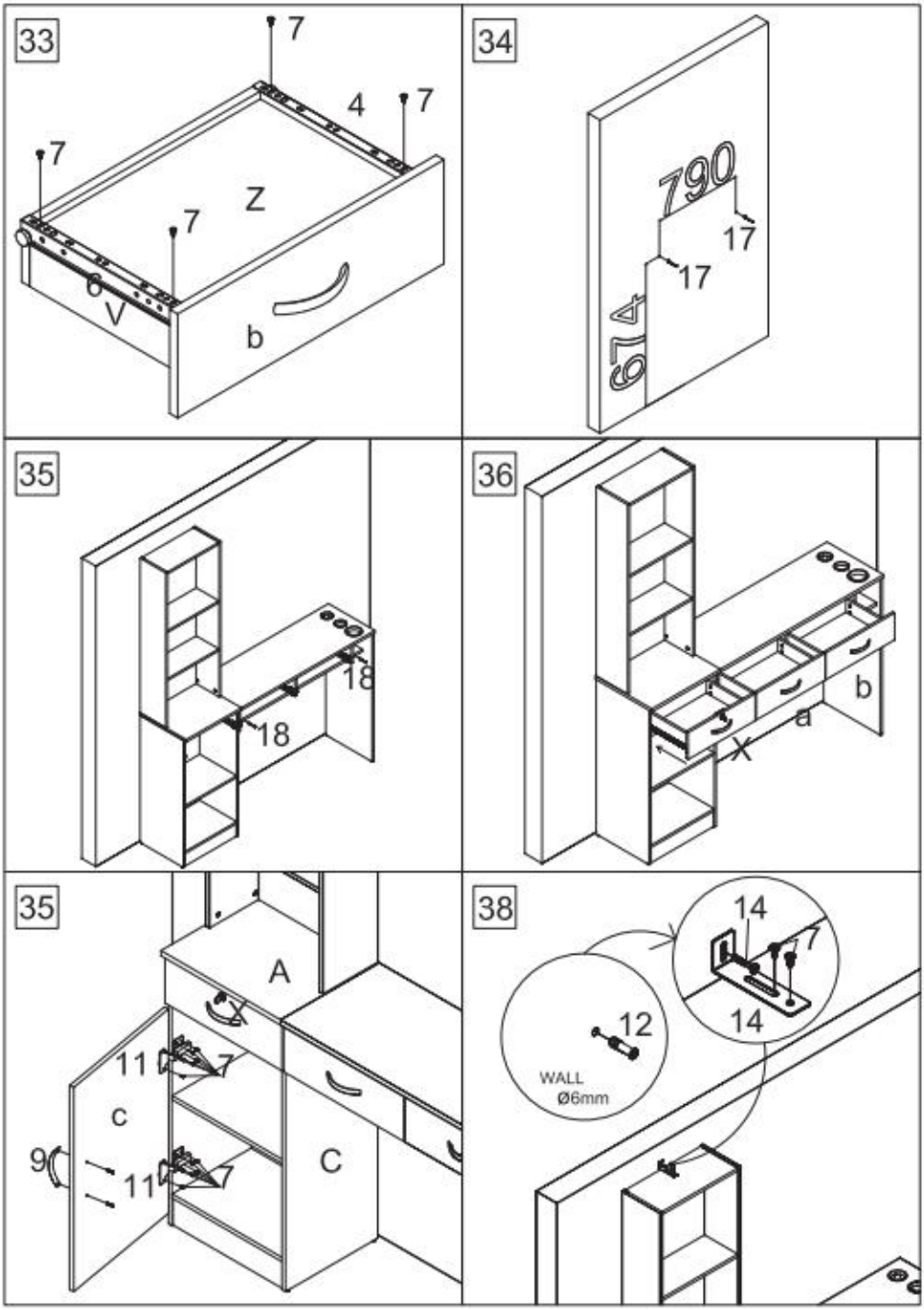
33
7
4
7
7
Z
7
6
V
b
34
790
17
17
654
35
18
18
36
b
a
X
35
A
11
7
c
9
11
7
C
38
14
7
14
12
WALL
Ø6mm

PRODUCT PARAMETER

Size（mm）	1290*330*1770
Colour	Black
Type	3 drawers
Texture	MDF+Heat resistant alloy
Handle	Aluminum alloy

Manufacturer: Shanghaimuxinmuyeyouxiangongsi
Address: Shuangchenglu 803nong11hao1602A-1609shi, baoshanqu, shanghai 200000 CN.
EC REP: E-CrossStu GmbH.
Mainzer Landstr.69, 60329 Frankfurt am Main.
UK REP: YH CONSULTING LIMITED.
C/O YH Consulting Limited Office 147, Centurion House, London Road, Staines-upon-Thames, Surrey, TW18 4AX
Imported to AUS: SIHAO PTY LTD.
1 ROKEVA STREETEASTWOOD NSW 2122 Australia
Imported to USA: Sanven Technology Ltd.
Suite 250, 9166 Anaheim Place, Rancho Cucamonga, CA 91730

VEVOR®

TOUGH TOOLS, HALF PRICE

Technical Support and E-Warranty Certificate

www.vevor.com/support

VEVOR®

TOUGH TOOLS, HALF PRICE

Technisch Support- und E-Garantie-Zertifikat www.vevor.com/support

SALON-STATION

Benutzerhandbuch _

We continue to be committed to provide you tools with competitive price.
"Save Half", "Half Price" or any other similar expressions used by us only represents an estimate of savings you might benefit from buying certain tools with us compared to the major top brands and does not necessarily mean to cover all categories of tools offered by us. You are kindly reminded to verify carefully when you are placing an order with us if you are actually saving half in comparison with the top major brands.

VEVOR®

TOUGH TOOLS, HALF PRICE

SALON STATION

MODELL: WC1001

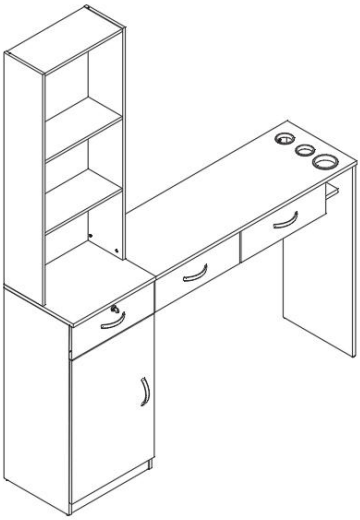

NEED HELP? CONTACT US!

Have product questions? Need technical support? Please feel free to contact us:

Technical Support and E-Warranty Certificate
www.vevor.com/support

This is the original instruction, please read all manual instructions carefully before operating. VEVOR reserves a clear interpretation of our user manual. The appearance of the product shall be subject to the product you received. Please forgive us that we won't inform you again if there are any technology or software updates on our product.

WARNUNG:

Lesen Sie diese Anleitung sorgfältig durch, bevor Sie dieses Produkt verwenden. Andernfalls kann es zu schweren Verletzungen kommen.

Vorsichtsmaßnahmen bei der Montage

9. Der Zusammenbau sollte nur gemäß dieser Anleitung erfolgen. Durch unsachgemäße Montage können Gefahren entstehen.
10. Tragen Sie während der Montage eine ANSI-zugelassene Schutzbrille und strapazierfähige Arbeitshandschuhe.
11. Halten Sie den Montagebereich sauber und gut beleuchtet.
12. Halten Sie Unbeteiligte während der Montage vom Bereich fern.
13. Nicht aufbauen, wenn Sie müde sind oder unter dem Einfluss von Alkohol, Drogen oder Medikamenten stehen.
14. Die Produkteigenschaften gelten nur für ordnungsgemäß und vollständig montierte Produkte.
15. Auf einer flachen, ebenen, harten und glatten Oberfläche montieren, die die Salonstation sicher tragen kann.
16. Weitere Informationen zu den auf den folgenden Seiten aufgeführten Teilen finden Sie im Montagediagramm dieser Anleitung. Packen Sie alle Teile aus und trennen Sie sie an einem sauberen Arbeitsplatz.

Treffen Sie Vorsichtsmaßnahmen

7. SITZEN ODER STEHEN SIE NICHT AUF DIESEM ARTIKEL.
8. Dieses Produkt ist kein Spielzeug. Erlauben Sie Kindern nicht, mit oder in der Nähe dieses Artikels zu spielen.
9. Überschreiten Sie nicht die Gewichtskapazität.
10. Salon Station sicher tragen kann .
11. Nur bestimmungsgemäß verwenden.
12. Vor jedem Gebrauch prüfen; Nicht verwenden, wenn Teile lose oder beschädigt sind.

ANLEITUNG AUFBEWAHREN

PARTS LIST

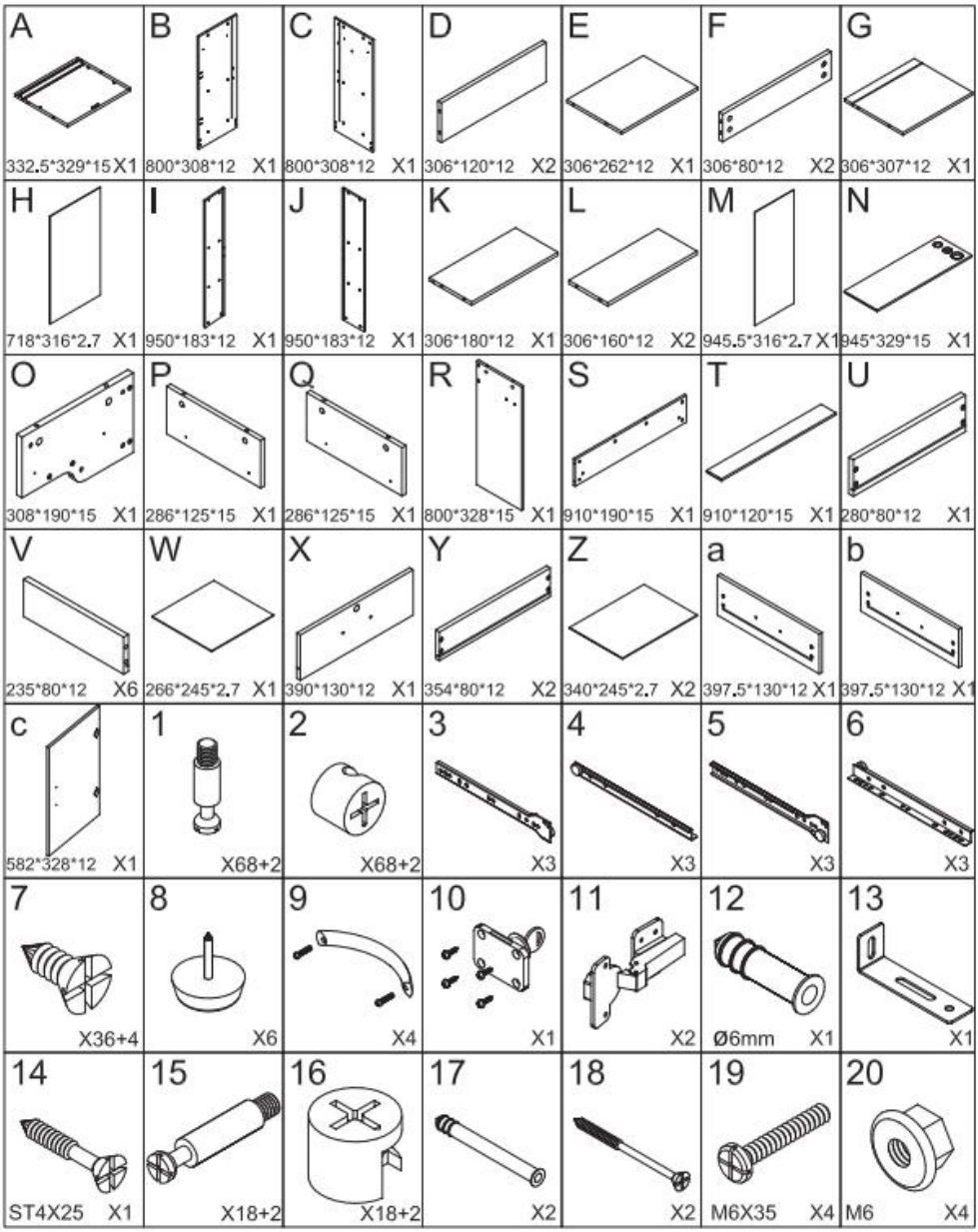
A
332.5*329*15 X1
B
800*308*12 X1
C
800*308*12 X1
D
306*120*12 X2
E
306*262*12 X1
F
306*80*12 X2
G
306*307*12 X1
H
718*316*2.7 X1
I
950*183*12 X1
J
950*183*12 X1
K
306*180*12 X1
L
306*160*12 X2
M
945.5*316*2.7 X1
N
945*329*15 X1
O
308*190*15 X1
P
286*125*15 X1
Q
286*125*15 X1
R
800*328*15 X1
S
910*190*15 X1
T
910*120*15 X1
U
280*80*12 X1
V
235*80*12 X6
W
266*245*2.7 X1
X
390*130*12 X1
Y
354*80*12 X2
Z
340*245*2.7 X2
a
397.5*130*12 X1
b
397.5*130*12 X1
c
582*328*12 X1
1
X68+2
2
X68+2
3
X3
4
X3
5
X3
6
X3
7
X36+4
8
X6
9
X4
10
X1
11
X2
12
Ø6mm X1
13
X1
14
ST4X25 X1
15
X18+2
16
X18+2
17
X2
18
X2
19
M6X35 X4
20
M6 X4

ASSEMBLY INSTRUCTION

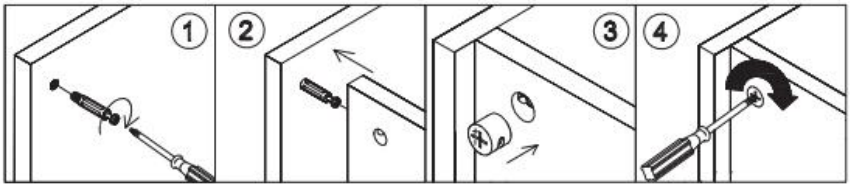

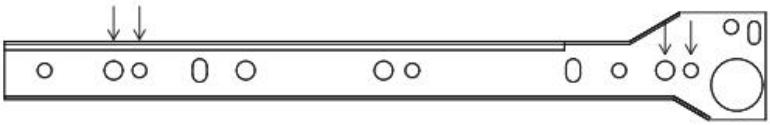

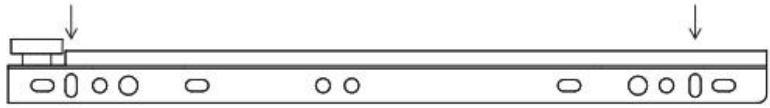

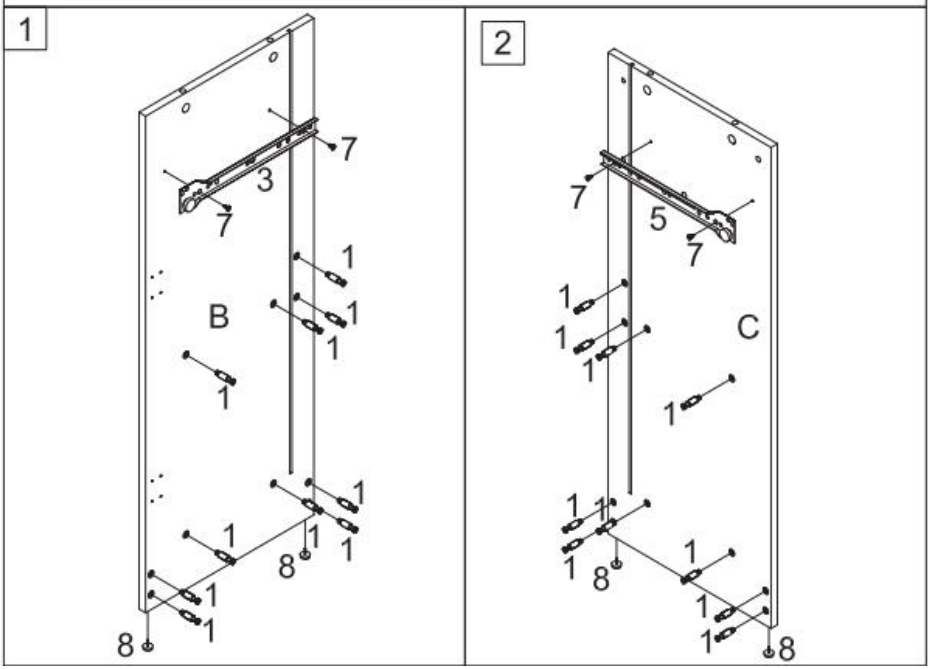

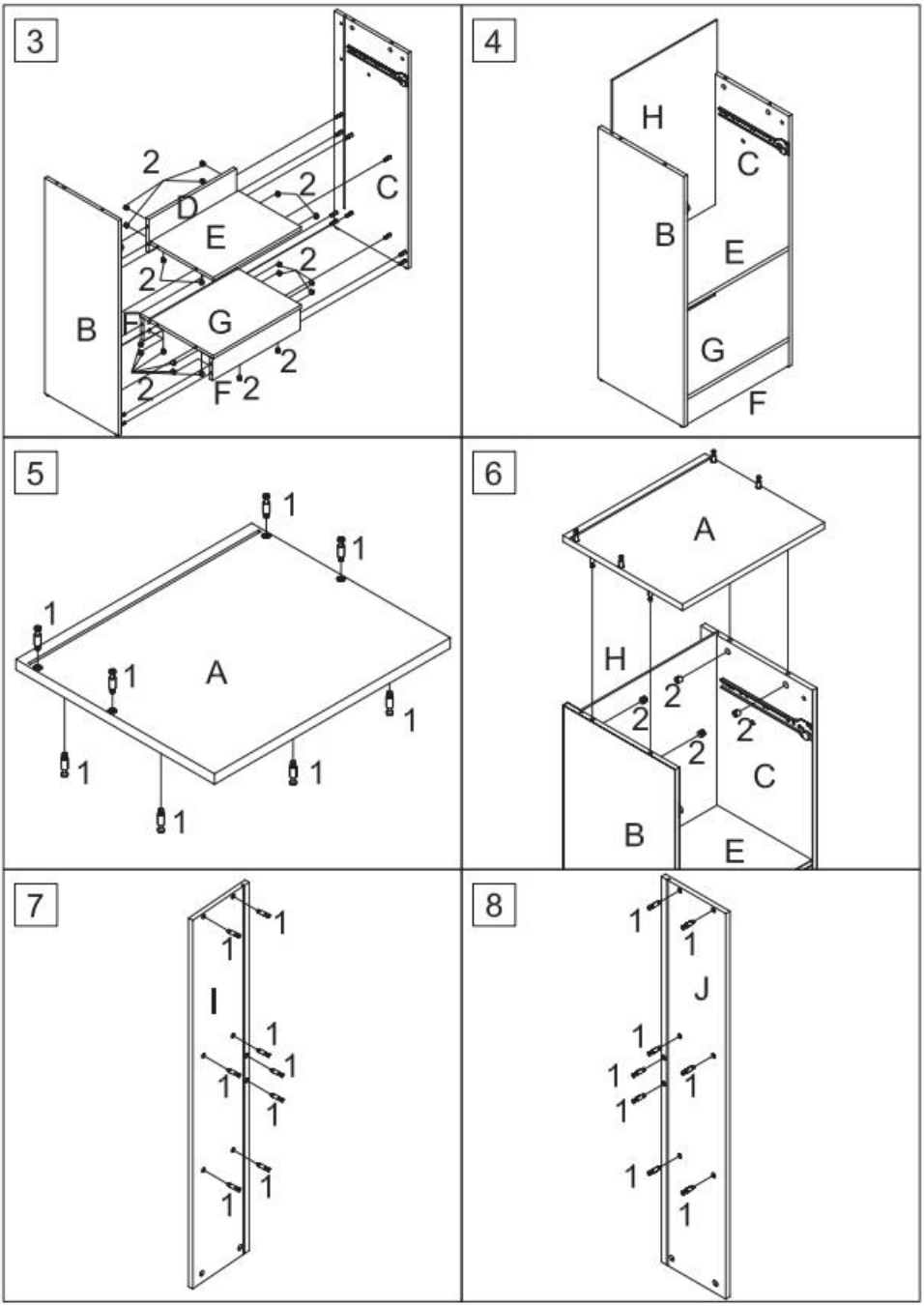
3
2
D
E
2
C
2
2
B
F
G
2
2
F
2
4
H
C
B
E
G
F
5
1
1
1
1
A
1
1
1
1
6
A
H
2
2
2
2
C
B
E
7
1
1
I
1
1
1
1
1
1
8
1
1
J
1
1
1
1
1
1

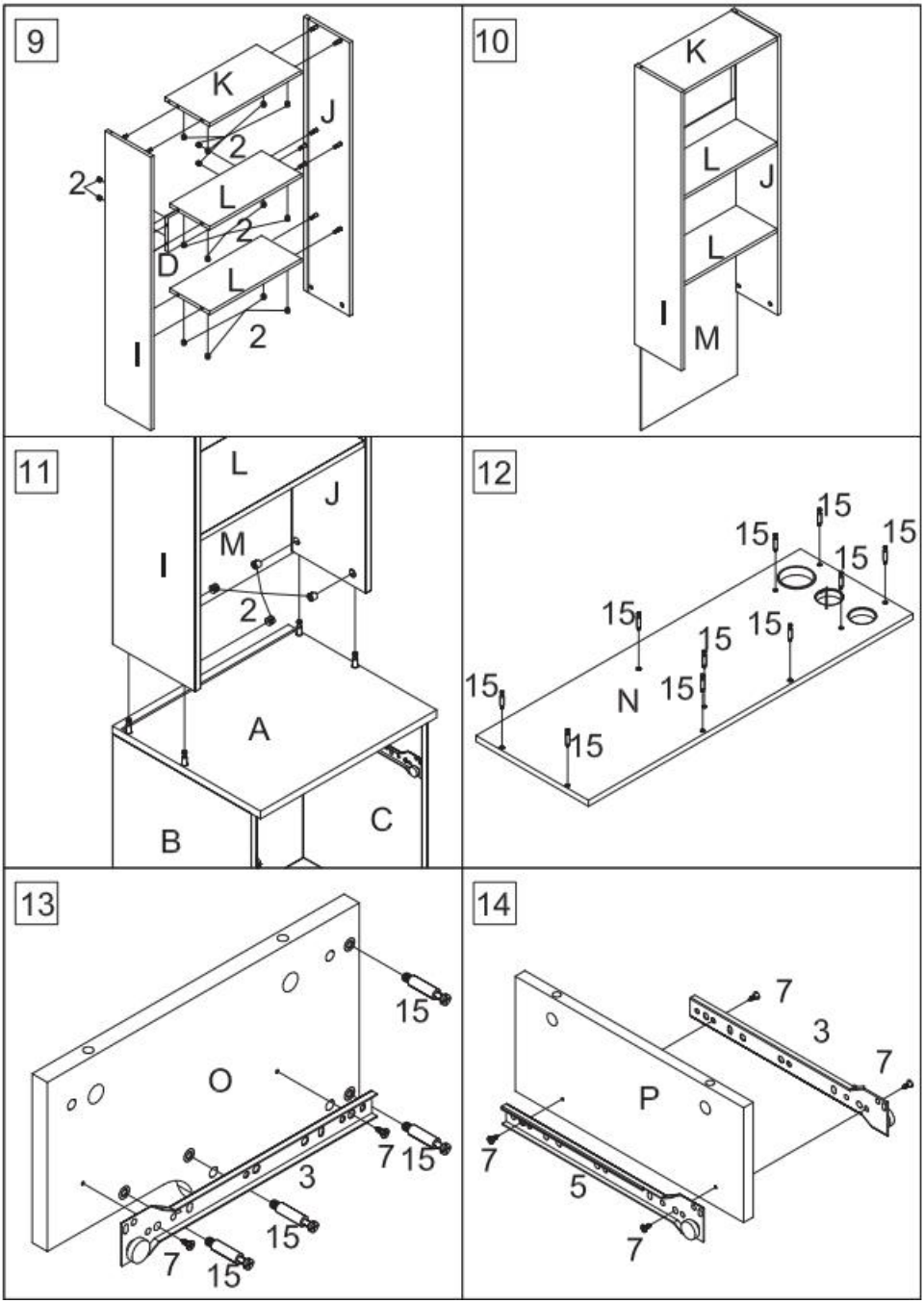
9
K
J
2
2
L
2
D
L
2
I
10
K
L
J
L
I
M
11
L
J
M
I
2
A
B
C
12
15
15
15
15
15
15
15
15
N
15
15
13
15
O
7
15
3
15
7
15
14
7
3
7
P
7
5
7

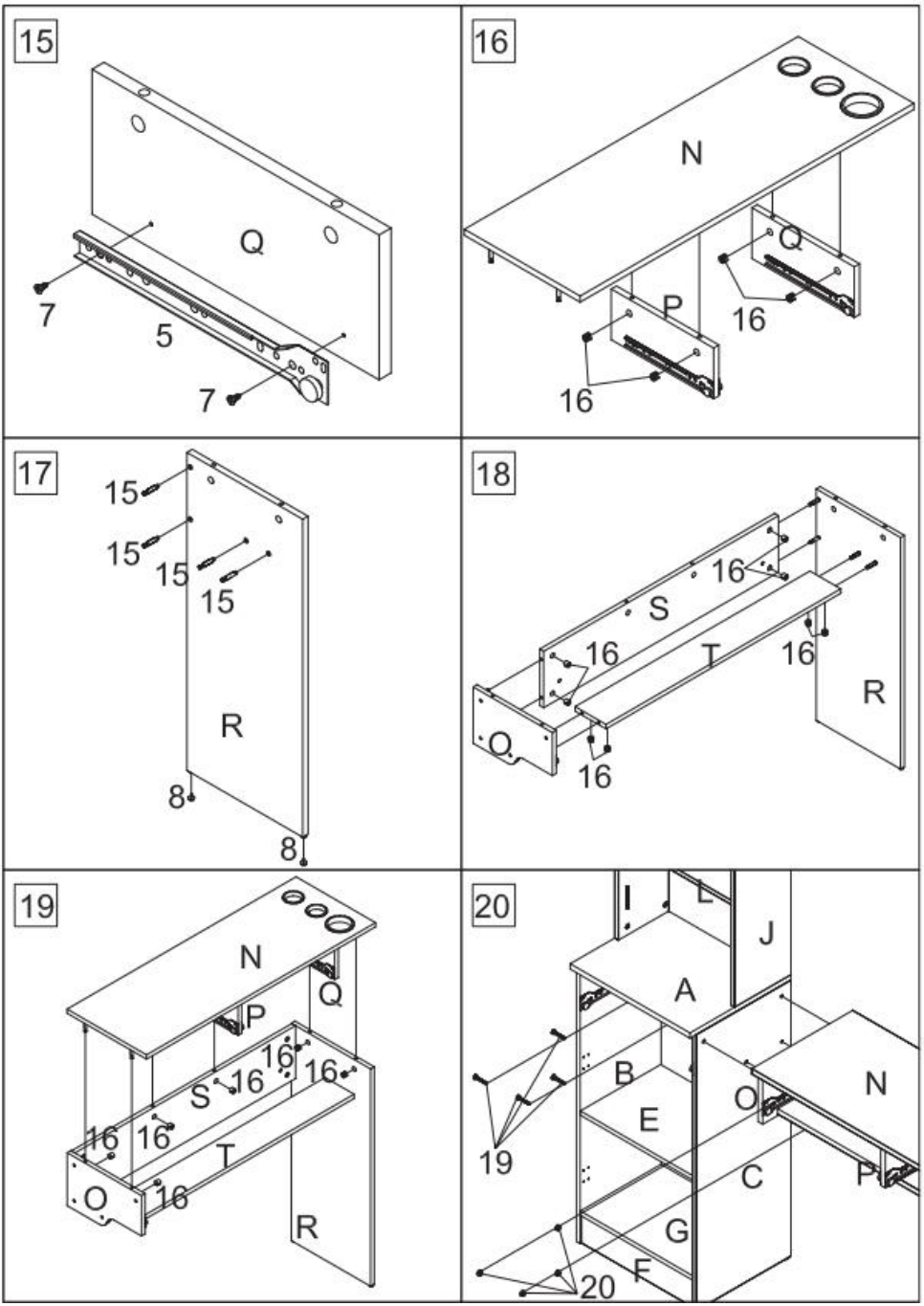
15
Q
7
5
7
16
N
Q
P
16
16
17
15
15
15
15
R
8
8
18
16
S
16
T
16
R
O
16
19
N
Q
P
16
16
16
S
16
16
16
T
O
16
R
20
I
L
J
A
B
N
O
E
19
C
P
G
F
20

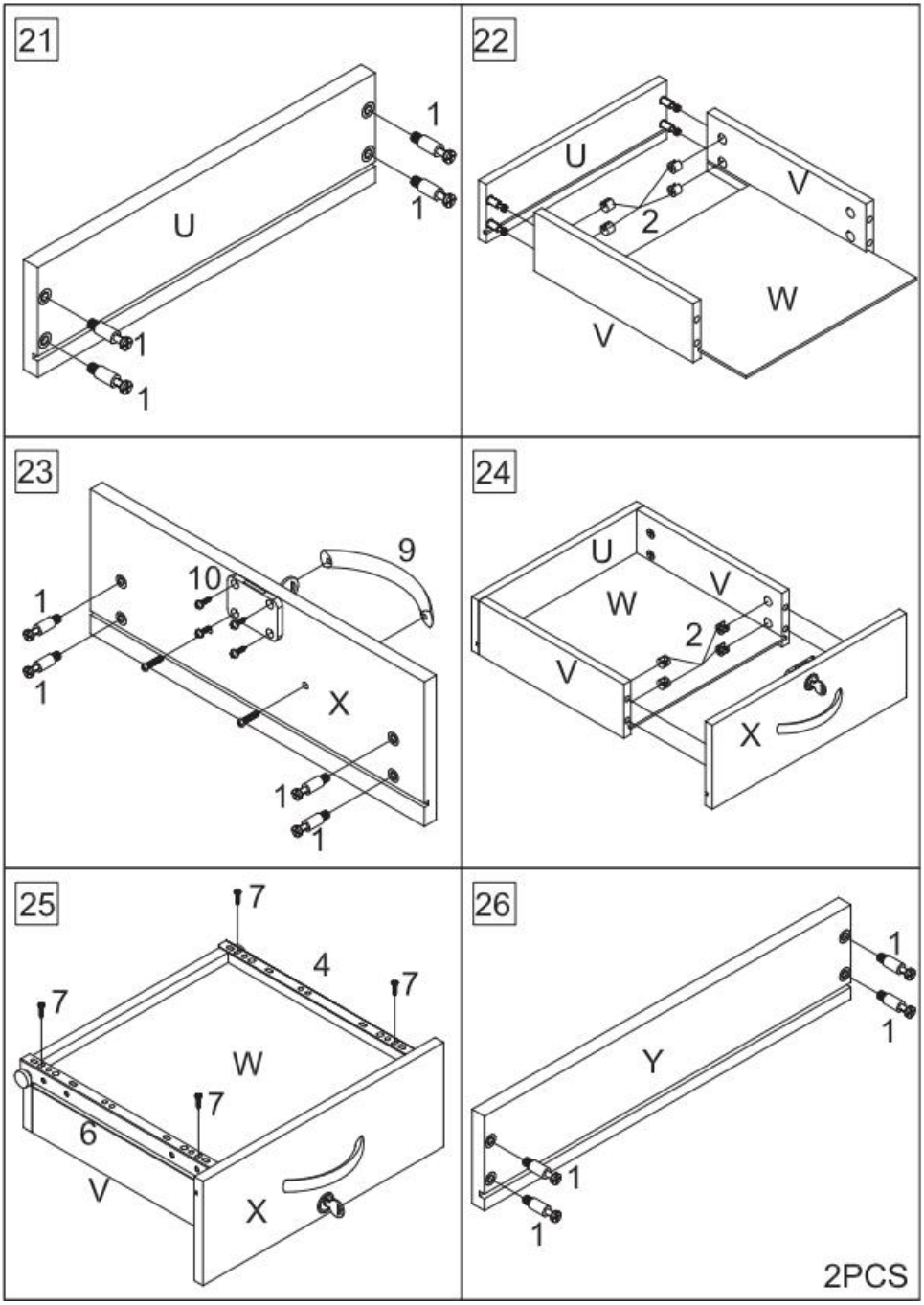
21
U
1
1
1
1
22
U
V
2
W
V
23
9
10
1
1
X
1
1
24
U
V
W
2
V
X
25
7
4
7
7
W
7
6
V
X
26
1
1
Y
1
1
2PCS

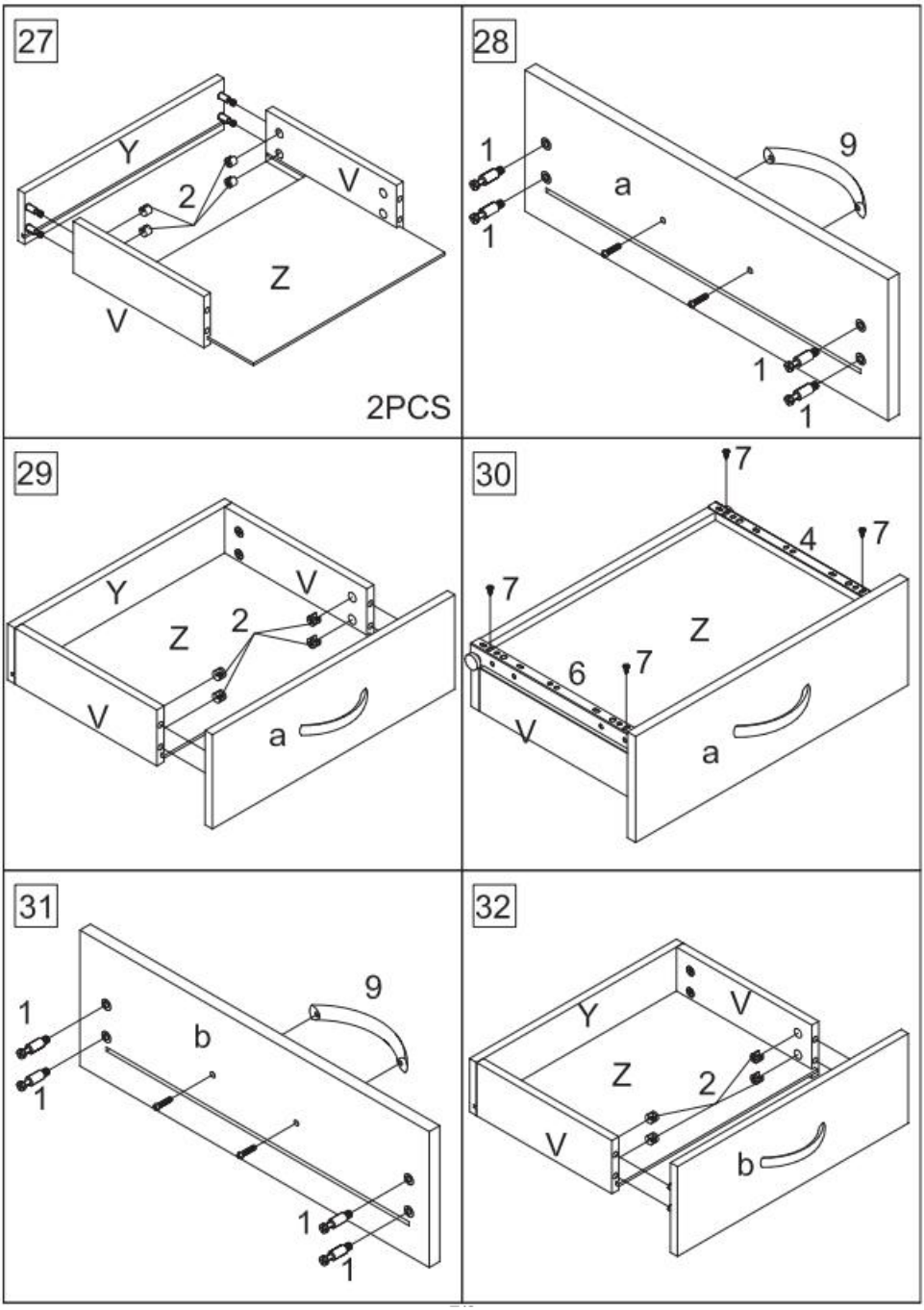
27
Y
2
V
Z
V
2PCS
28
1
9
a
1
1
1
29
Y
V
Z
2
V
a
30
7
4
7
7
Z
6
7
V
a
31
1
9
b
1
1
1
32
Y
V
Z
2
V
b

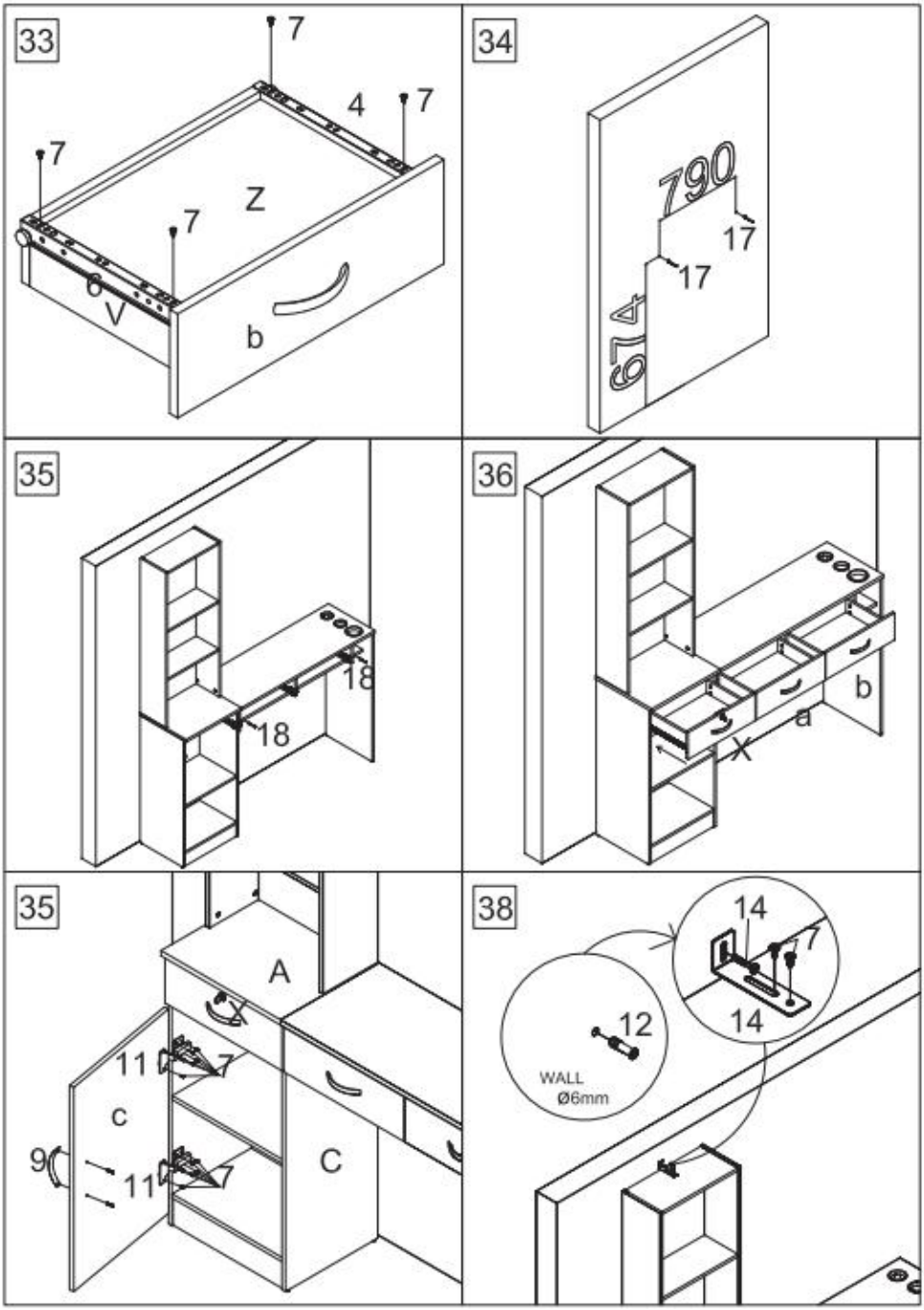
33
7
4
7
7
Z
7
6
V
b
34
790
17
17
654
35
18
18
36
b
a
X
35
A
11
7
c
9
11
7
C
38
14
7
14
12
WALL
Ø6mm

PRODUCT PARAMETER

Größe (mm)	1290*330*1770
Farbe	Schwarz
Typ	3 Schubladen
Textur	MDF + hitzebeständige Legierung
Handhaben	Aluminiumlegierung

Adresse: Baoshanqu Shuangchenglu 803long 11hao 1602A-1609shi Shanghai
Importiert nach AUS: SIHAO PTY LTD. 1 ROKEVA STREETEASTWOOD NSW 2122 Australien
In die USA importiert: Sanven Technology Ltd. Suite 250, 9166 Anaheim Place, Rancho Cucamonga, CA 91730

EC REP

SHUNSHUN GmbH
Römeräcker 9 Z2021,76351
Linkenheim-Hochstetten, Germany
euvertreter@gmail.com
+49 1727041930

UK REP

Pooledas Group Ltd
Unit 5 Albert Edward House, The
Pavilions Preston, United Kingdom
pooledas123@gmail.com
01772418127

In China hergestellt

VEVOR®

TOUGH TOOLS, HALF PRICE

Technisch Support- und E-Garantiezertifikat

www.vevor.com/support

VEVOR®

TOUGH TOOLS, HALF PRICE

Technique Assistance et certificat de garantie électronique

www.vevor.com/support

STATION SALON

de L'UTILISATEUR

We continue to be committed to provide you tools with competitive price.
"Save Half", "Half Price" or any other similar expressions used by us only represents an estimate of savings you might benefit from buying certain tools with us compared to the major top brands and does not necessarily mean to cover all categories of tools offered by us. You are kindly reminded to verify carefully when you are placing an order with us if you are actually saving half in comparison with the top major brands.

VEVOR®

TOUGH TOOLS, HALF PRICE

SALON STATION

MODÈLE : WC1001

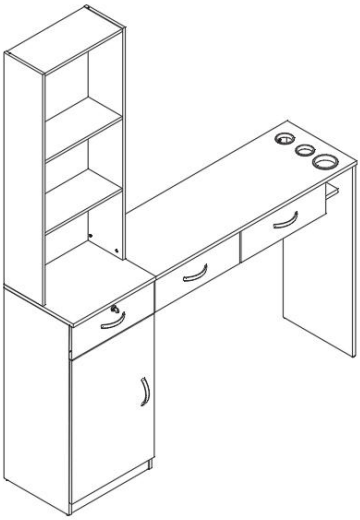

NEED HELP? CONTACT US!

Have product questions? Need technical support? Please feel free to contact us:

Technical Support and E-Warranty Certificate
www.vevor.com/support

This is the original instruction, please read all manual instructions carefully before operating. VEVOR reserves a clear interpretation of our user manual. The appearance of the product shall be subject to the product you received. Please forgive us that we won't inform you again if there are any technology or software updates on our product.

AVERTISSEMENT:

Lisez attentivement ces instructions avant d'utiliser ce produit. Ne pas le faire peut entraîner des blessures graves.

Précautions de montage

17. L'assemblage doit uniquement se faire selon ces instructions. Un assemblage incorrect peut entraîner des dangers.
18. Portez des lunettes de sécurité approuvées par l'ANSI et des gants de travail robustes pendant l'assemblage.
19. Gardez la zone de rassemblement propre et bien éclairée.
20. Gardez les spectateurs hors de la zone pendant l’ assemblage.
21. Ne vous rassemblez pas lorsque vous êtes fatigué ou sous l’ influence de l’ alcool, de drogues ou de médicaments.
22. Les capacités du produit s'appliquent uniquement aux produits correctement et complètement assemblés.
23. Assemblez-le sur une surface plane, nivelée, dure et lisse, capable de supporter en toute sécurité la station de salon.
24. Pour plus d'informations concernant les pièces répertoriées dans les pages suivantes, veuillez vous référer au schéma d'assemblage de ce manuel. Déballez et séparez toutes les pièces dans une zone de travail propre.

Utiliser des précautions

13. NE PAS ÊTRE ASSIS OU DEBOUT SUR CET ARTICLE.
14. Ce produit n'est pas un jouet. Ne laissez pas les enfants jouer avec ou à proximité de cet article.
15. Ne dépassez pas les capacités de poids.
16. station de salon entièrement chargée .
17. Utiliser uniquement comme prévu.
18. Inspectez avant chaque utilisation ; ne pas utiliser si les pièces sont desserrées ou endommagées.

CONSERVEZ CES INSTRUCTIONS

PARTS LIST

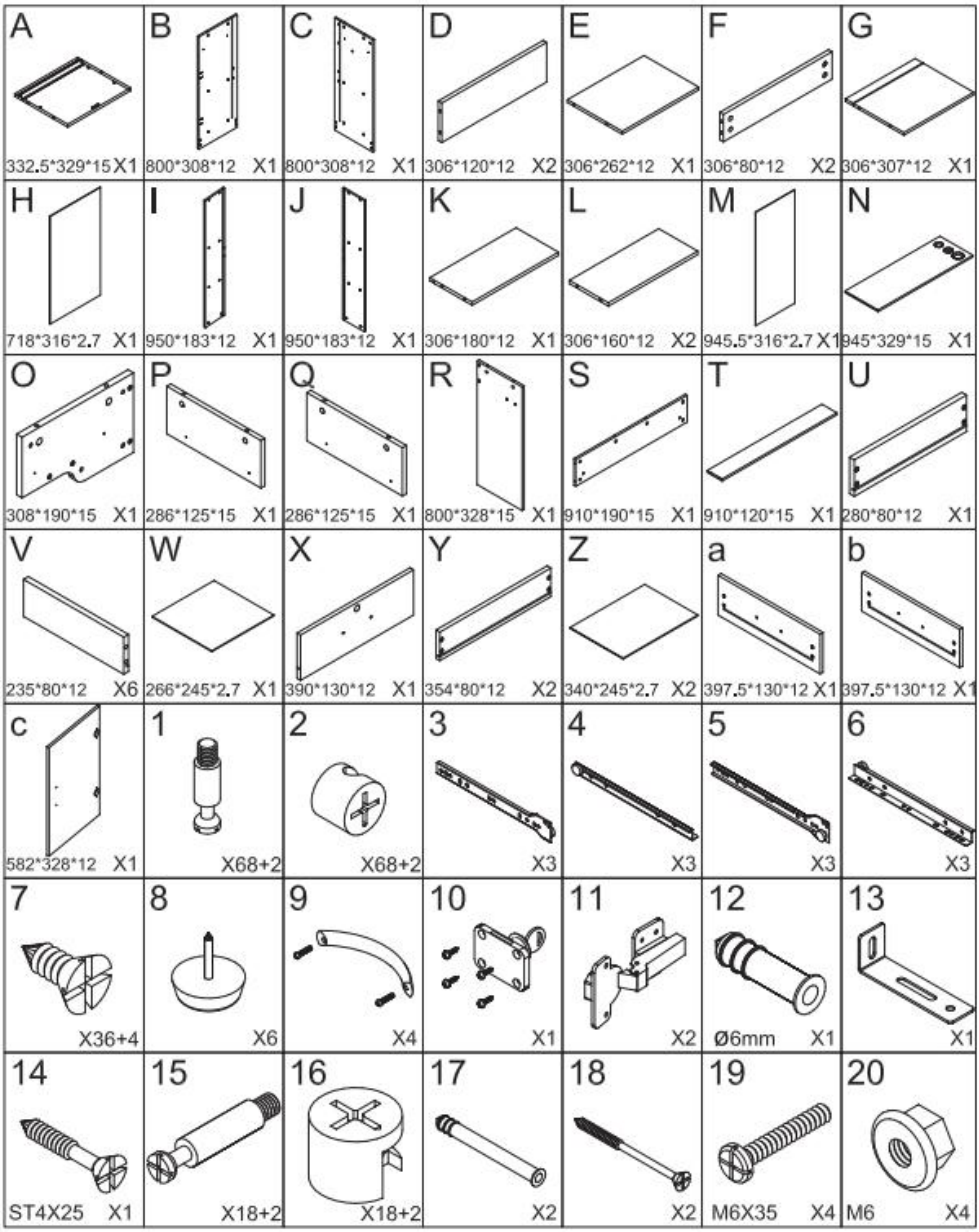

ASSEMBLY INSTRUCTION

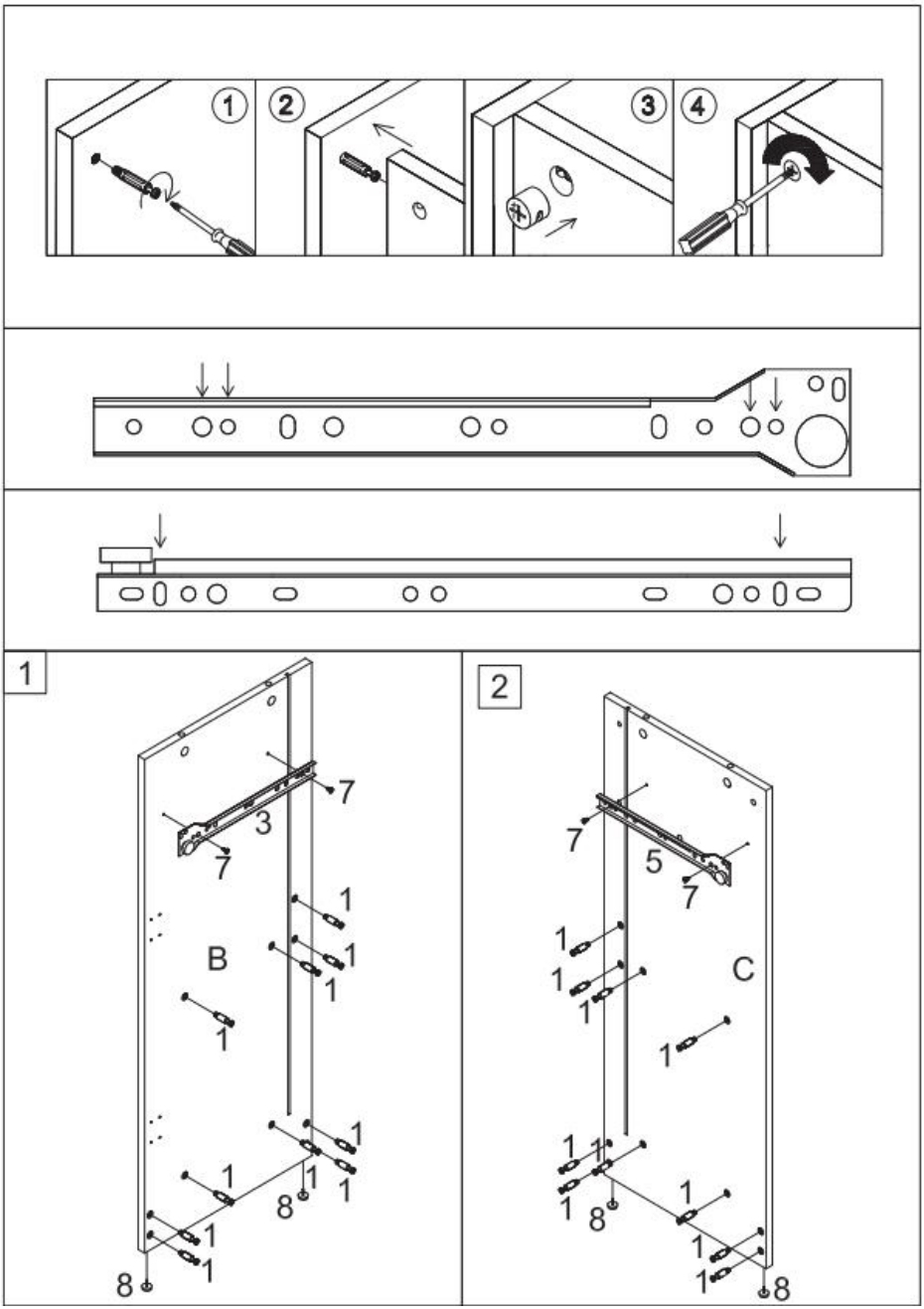

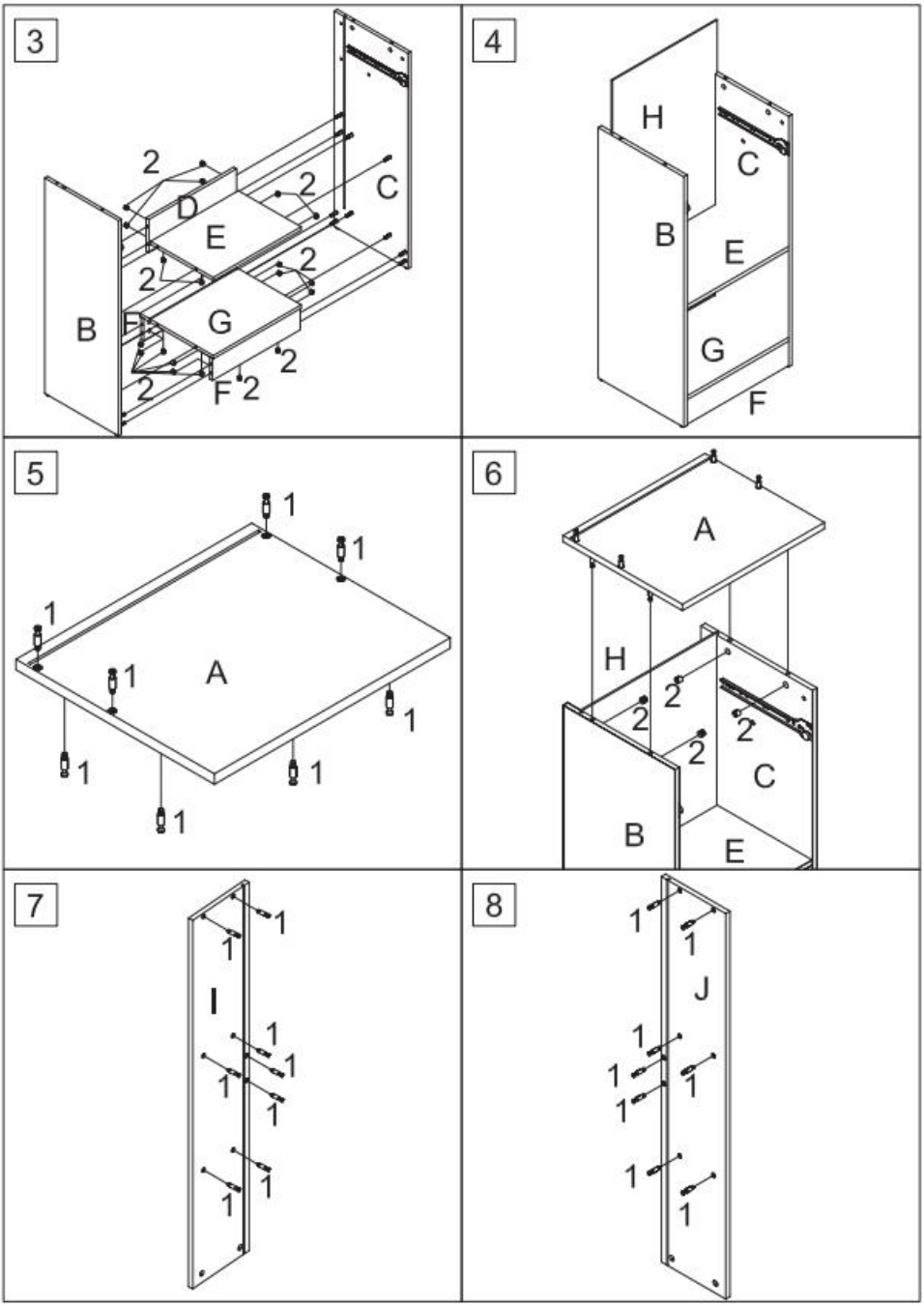
3
2
D
2
C
E
2
2
B
F
G
2
2
F
2
4
H
C
B
E
G
F
5
1
1
1
1
A
1
1
1
1
6
A
H
2
2
2
2
C
B
E
7
1
1
I
1
1
1
1
1
1
8
1
1
J
1
1
1
1
1
1

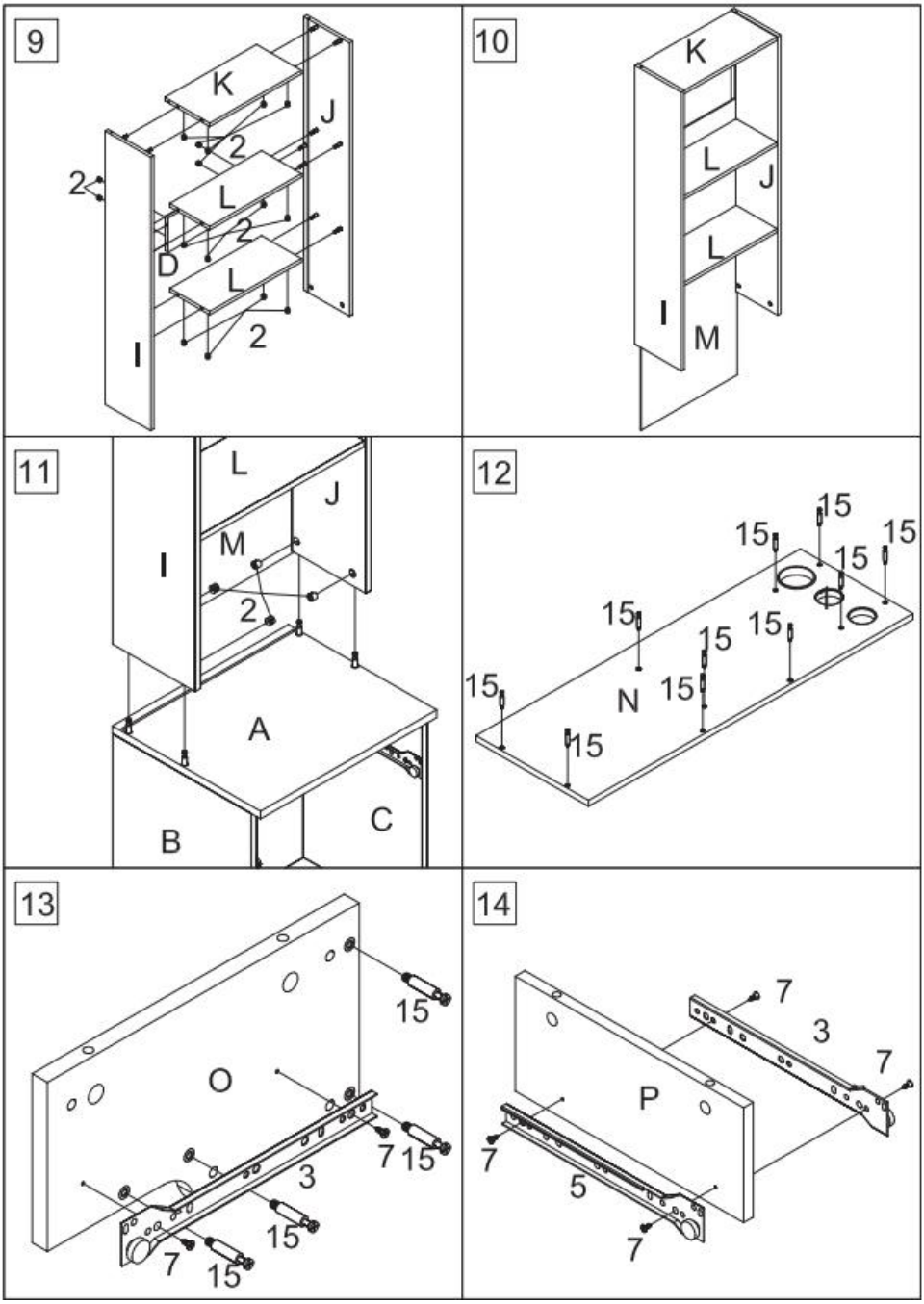
9
K
J
2
2
L
2
D
L
2
I
10
K
L
J
L
I
M
11
L
J
M
I
2
A
B
C
12
15
15
15
15
15
15
15
15
N
15
15
13
15
O
7
15
3
15
7
15
14
7
3
7
P
7
5
7

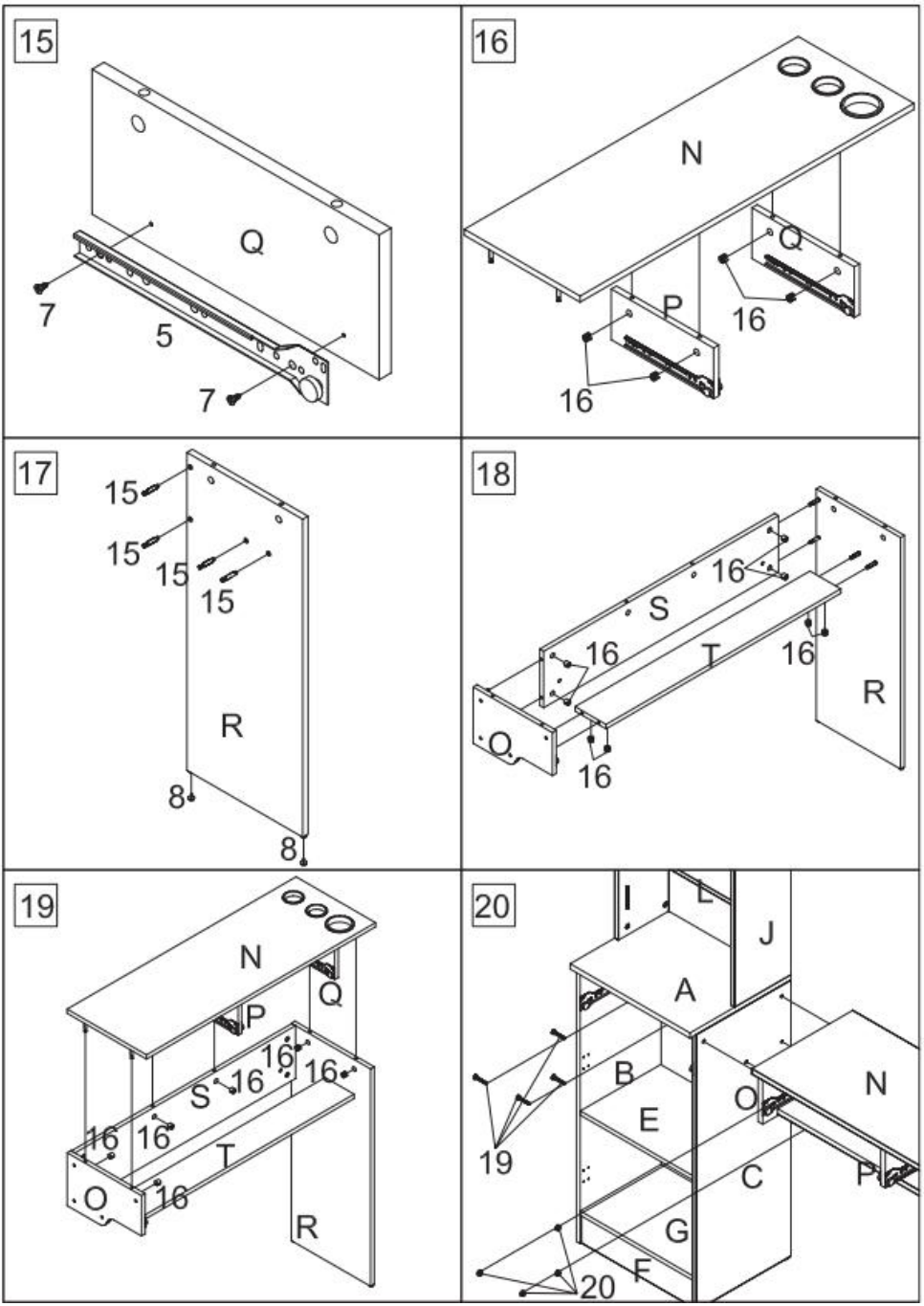
15
Q
7
5
7
16
N
Q
P
16
16
17
15
15
15
15
R
8
8
18
16
S
16
T
16
R
Q
16
19
N
Q
P
16
16
S
16
16
16
T
O
16
R
20
I
L
J
A
B
N
O
E
19
C
P
G
F
20

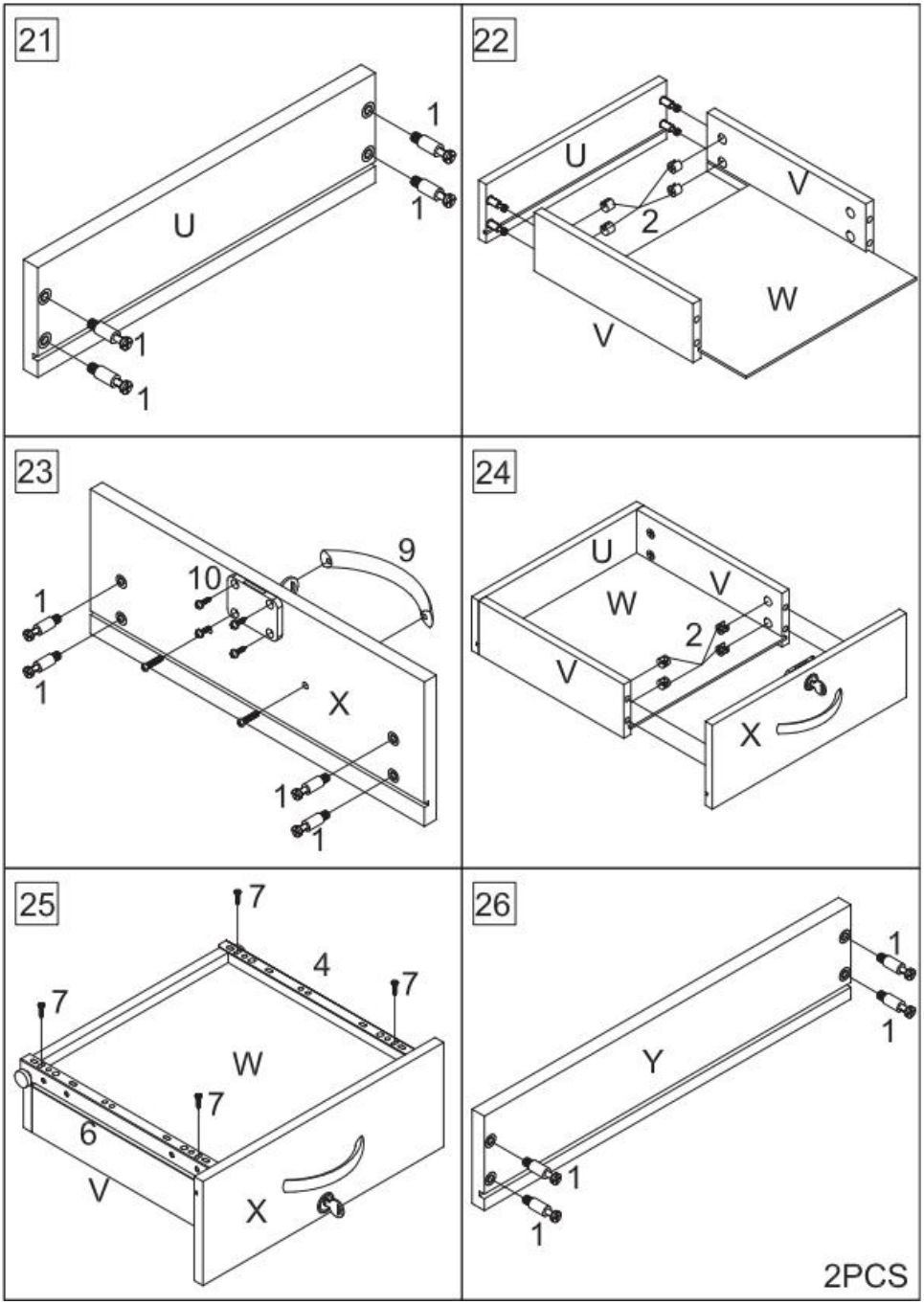
21
U
1
1
1
1
22
U
V
2
W
V
23
9
10
1
1
X
1
1
24
U
V
W
2
V
X
25
7
4
7
7
W
7
6
V
X
26
1
1
Y
1
1
2PCS

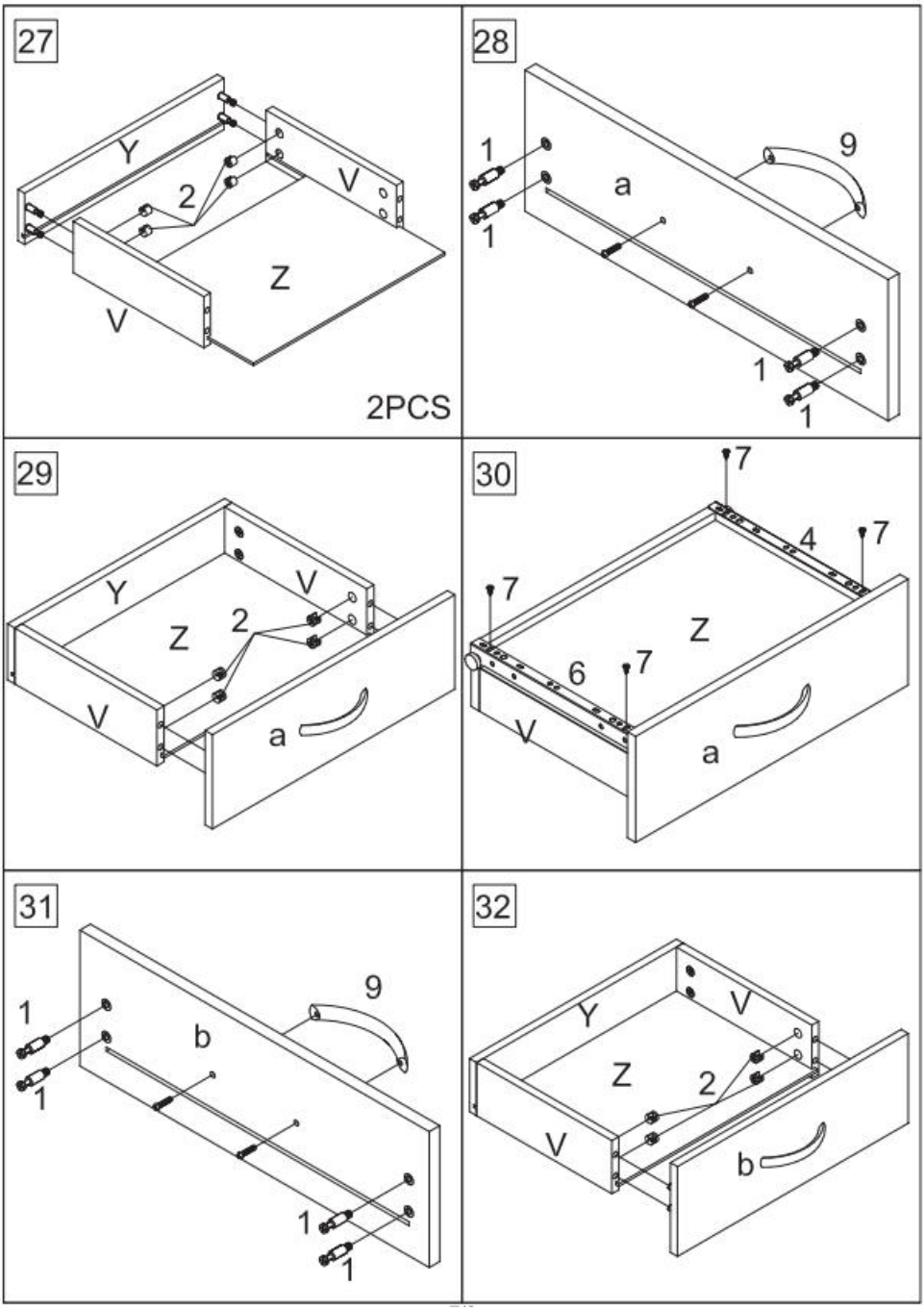
27
Y
2
V
Z
V
2PCS
28
1
9
a
1
1
1
29
Y
V
Z
2
V
a
30
7
4
7
7
Z
6
7
V
a
31
1
9
b
1
1
1
32
Y
V
Z
2
V
b

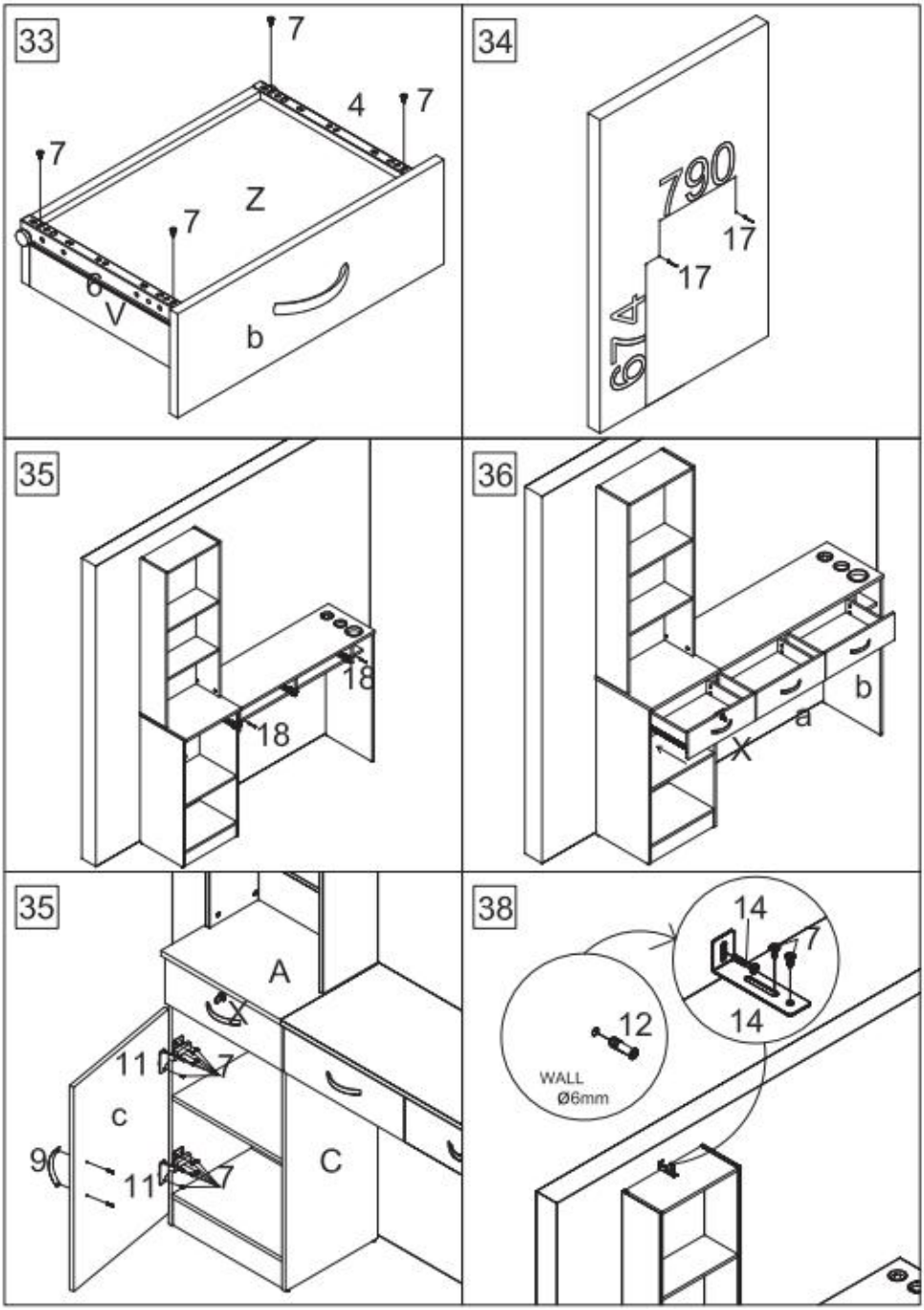
33
7
4
7
7
Z
7
6
V
b
34
790
17
17
614
35
18
18
36
b
a
X
35
A
11
7
c
9
11
7
C
38
14
7
14
12
WALL
Ø6mm

PRODUCT PARAMETER

Taille (mm)	1290*330*1770
Couleur	Noir
Taper	3 tiroirs
Texture	MDF + alliage résistant à la chaleur
Poignée	Alliage d'aluminium

Adresse : Baoshanqu Shuangchenglu 803long 11hao 1602A-1609shi Shanghai
Importé en Australie : SIHAO PTY LTD. 1 ROKEVA STREETASTWOOD NSW 2122 Australie
Importé aux États-Unis : Sanven Technology Ltd. Suite 250, 9166 Anaheim Place, Rancho Cucamonga, CA 91730

EC REP

SHUNSHUN GmbH
Römeräcker 9 Z2021,76351
Linkenheim-Hochstetten, Germany
euvertreter@gmail.com
+49 1727041930

UK REP

Pooledas Group Ltd
Unit 5 Albert Edward House, The
Pavilions Preston, United Kingdom
pooledas123@gmail.com
01772418127

Fabriqué en Chine

VEVOR®

TOUGH TOOLS, HALF PRICE

Technique Assistance et certificat de garantie électronique

www.vevor.com/support

VEVOR®

TOUGH TOOLS, HALF PRICE

Technisch Ondersteuning en e-garantiecertificaat www.vevor.com/support

SALONSTATION

Handleiding _

We continue to be committed to provide you tools with competitive price.
"Save Half", "Half Price" or any other similar expressions used by us only represents an estimate of savings you might benefit from buying certain tools with us compared to the major top brands and does not necessarily mean to cover all categories of tools offered by us. You are kindly reminded to verify carefully when you are placing an order with us if you are actually saving half in comparison with the top major brands.

VEVOR®

TOUGH TOOLS, HALF PRICE

SALON STATION

MODEL: WC1001

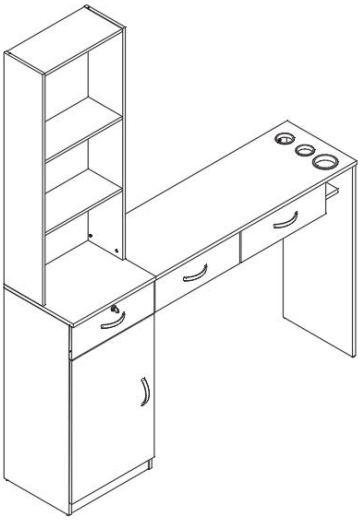

NEED HELP? CONTACT US!

Have product questions? Need technical support? Please feel free to contact us:

Technical Support and E-Warranty Certificate
www.vevor.com/support

This is the original instruction, please read all manual instructions carefully before operating. VEVOR reserves a clear interpretation of our user manual. The appearance of the product shall be subject to the product you received. Please forgive us that we won't inform you again if there are any technology or software updates on our product.

WAARSCHUWING:

Lees deze instructies zorgvuldig door voordat u dit product gebruikt. Als u dit niet doet, kan dit leiden tot ernstig letsel.

Voorzorgsmaatregelen voor montage

25. Alleen de montage dient volgens deze instructies te gebeuren. Onjuiste montage kan tot gevaren leiden.
26. Draag tijdens de montage een ANSI-goedgekeurde veiligheidsbril en stevige werkhandschoenen.
27. Houd de verzamelplaats schoon en goed verlicht.
28. Houd omstanders tijdens de montage uit de buurt.
29. Niet monteren als u moe bent of onder invloed bent van alcohol, drugs of medicijnen.
30. De productmogelijkheden zijn alleen van toepassing op correct en volledig gemonteerde producten.
31. Monteer op een vlakke, vlakke, harde en gladde ondergrond die het salonstation veilig kan ondersteunen.
32. Voor aanvullende informatie over de onderdelen die op de volgende pagina's worden vermeld, verwijzen wij u naar het montageschema van deze handleiding. Pak alle onderdelen uit en scheid ze van elkaar op een schone werkplek.

Gebruik voorzorgsmaatregelen

19. ZIT OF STA NIET OP DIT ITEM.
20. Dit product is geen speelgoed. Laat kinderen niet met of in de buurt van dit artikel spelen.
21. Overschrijd de gewichtscapaciteiten niet.
22. salonstation veilig kan ondersteunen .
23. Alleen gebruiken zoals bedoeld.
24. Inspecteer vóór elk gebruik; niet gebruiken als onderdelen los of beschadigd zijn.

BEWAAR DEZE INSTRUCTIES

PARTS LIST

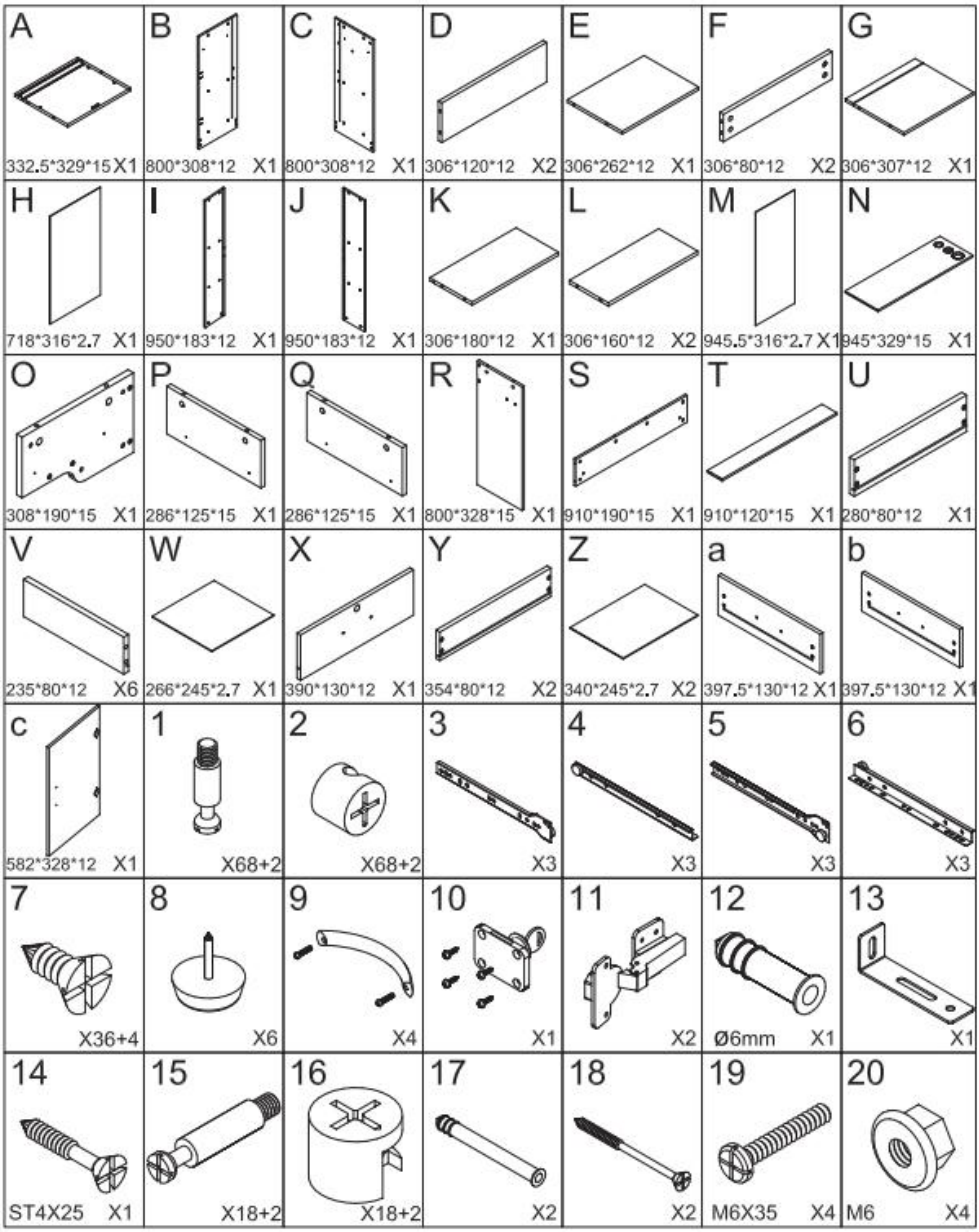

ASSEMBLY INSTRUCTION

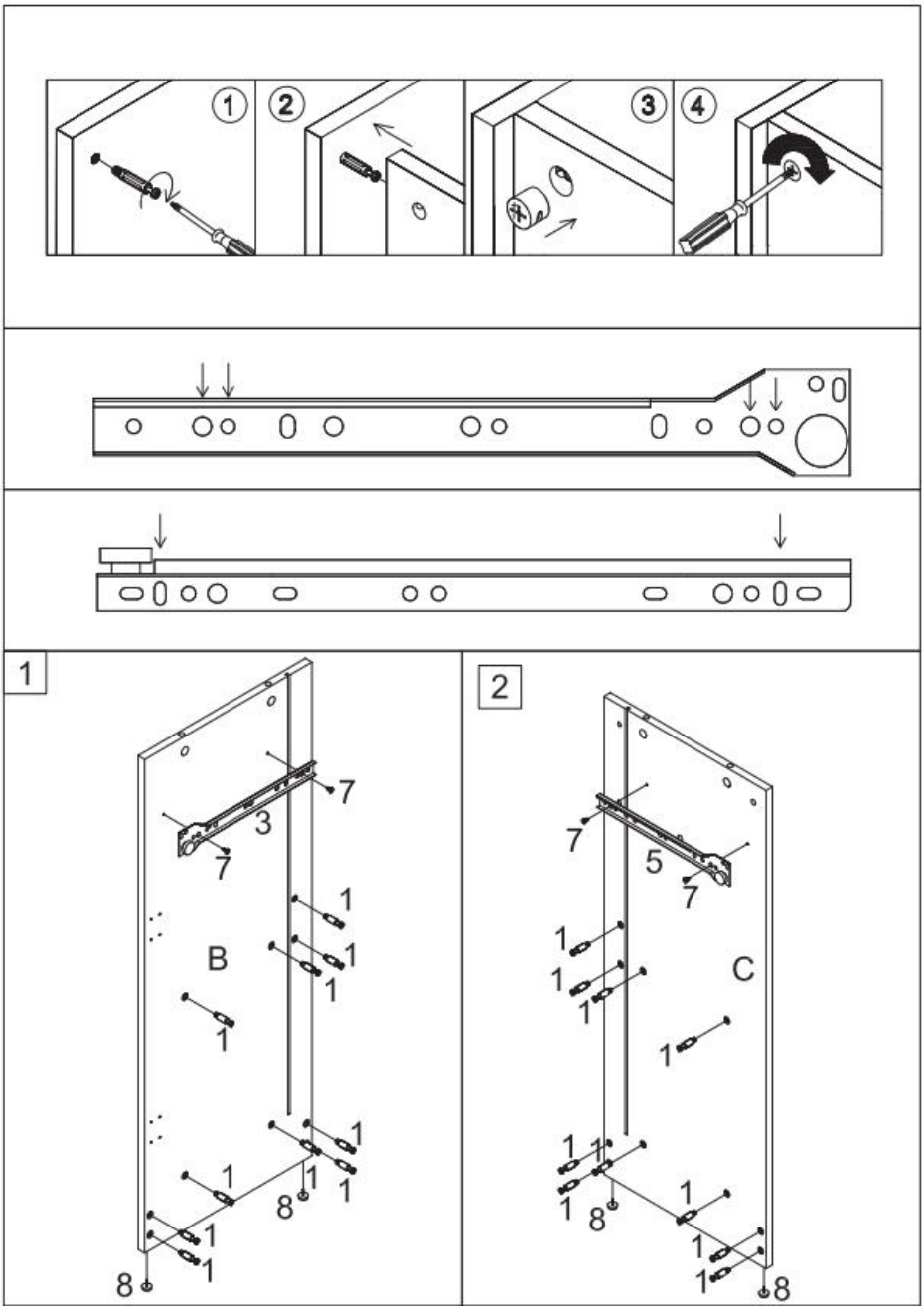

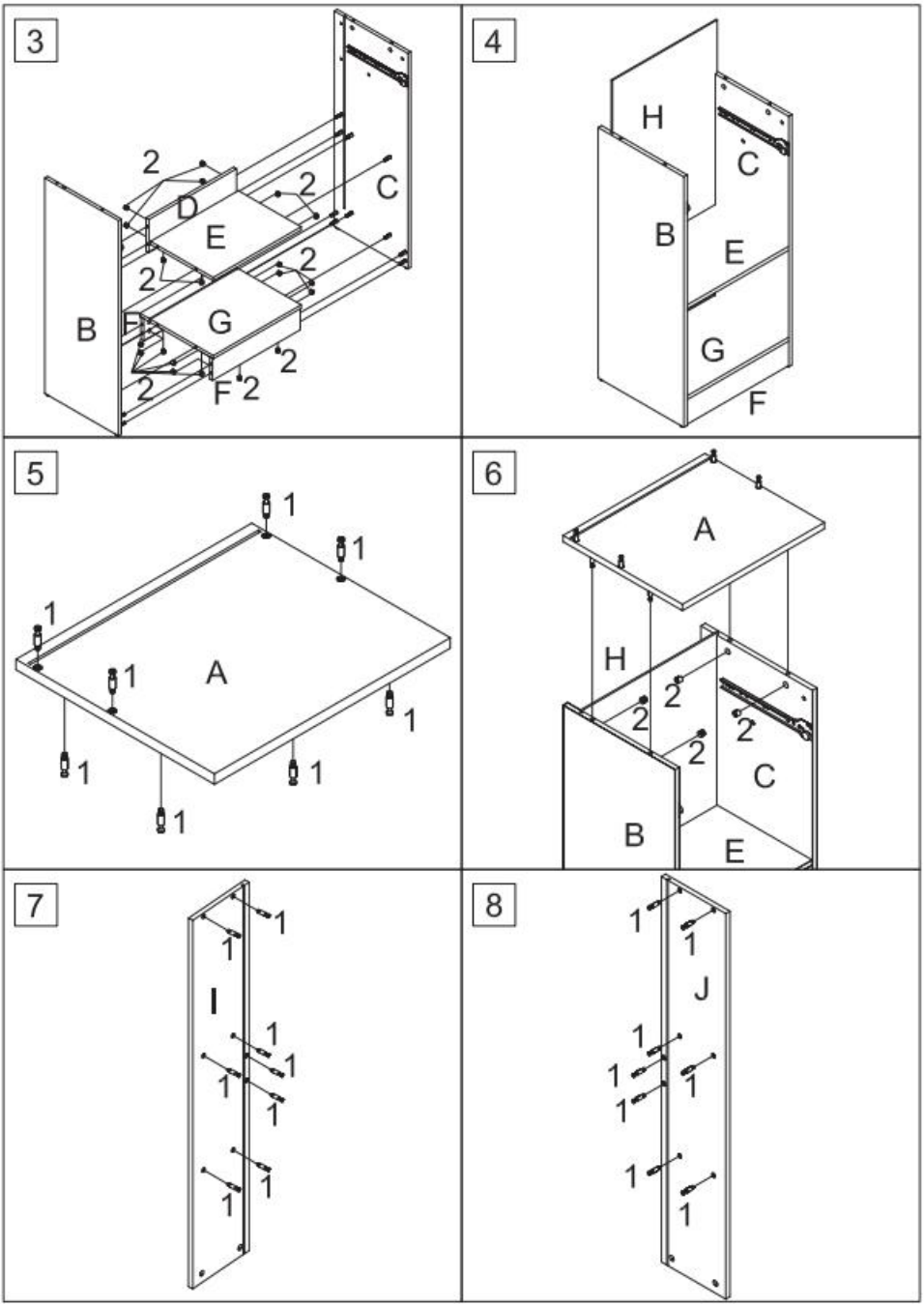
3
2
D
2
C
E
2
2
B
F
G
2
2
F
2
4
H
C
B
E
G
F
5
1
1
1
1
A
1
1
1
1
6
A
H
2
2
2
2
C
B
E
7
1
1
I
1
1
1
1
1
1
8
1
1
J
1
1
1
1
1
1

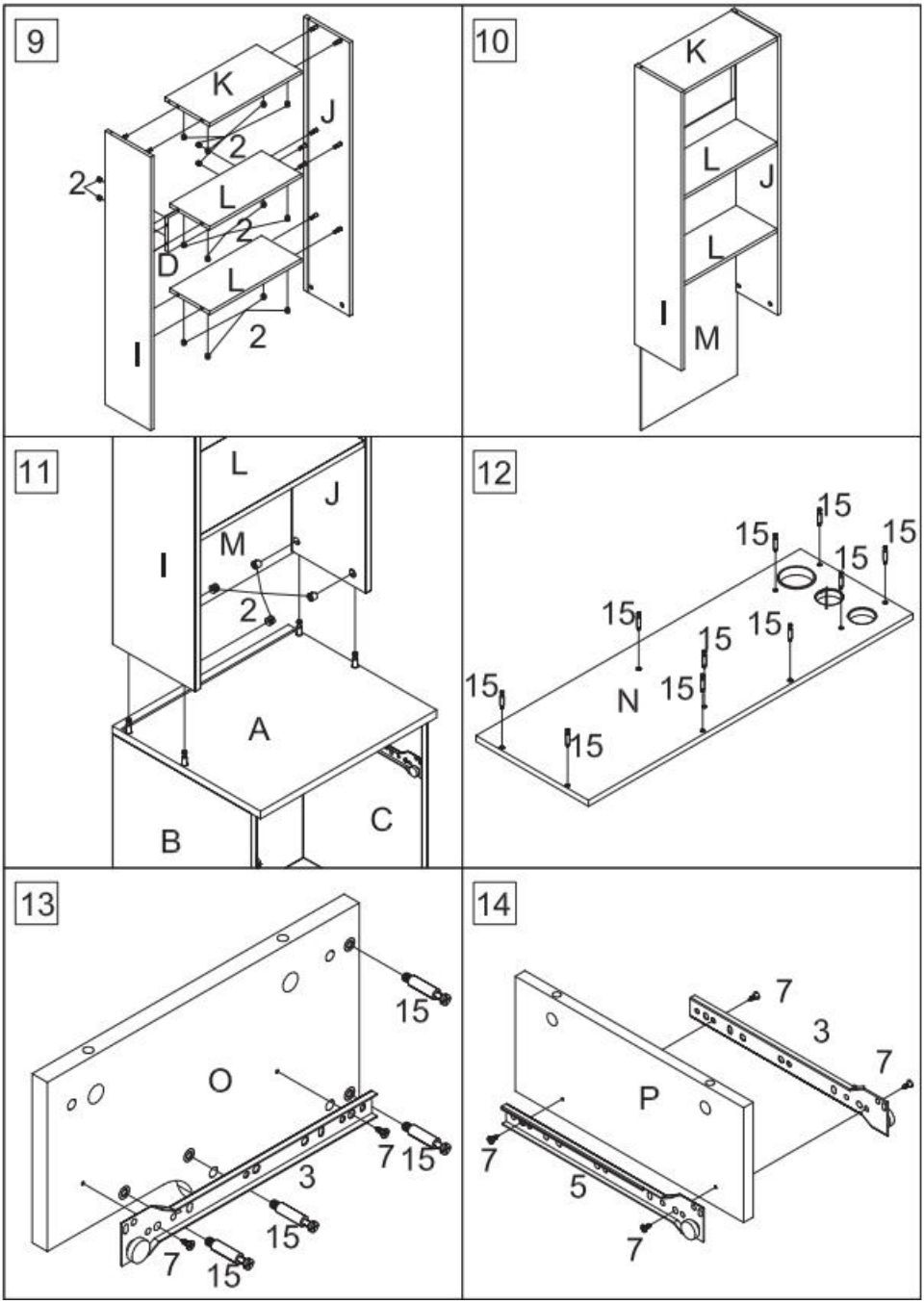
9
K
J
2
2
L
2
D
L
2
I
10
K
L
J
L
I
M
11
L
J
M
I
2
A
B
C
12
15
15
15
15
15
15
15
15
N
15
15
13
15
O
7
15
3
15
7
15
14
7
3
7
P
7
5
7

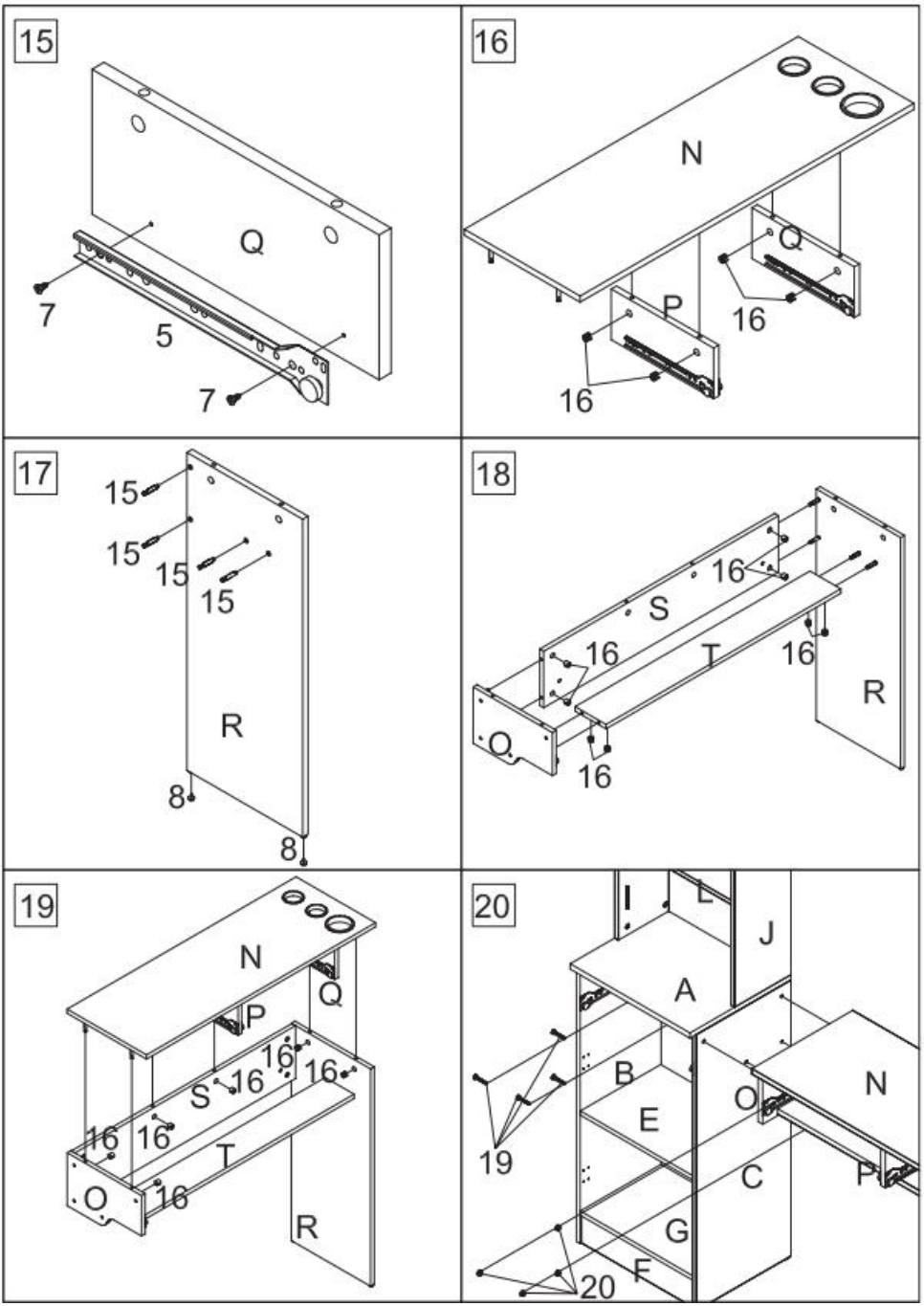
15
Q
7
5
7
16
N
Q
P
16
16
17
15
15
15
15
R
8
8
18
16
S
16
T
16
R
Q
16
19
N
Q
P
16
16
S
16
16
16
T
O
16
R
20
I
L
J
A
B
N
O
E
19
C
P
G
F
20

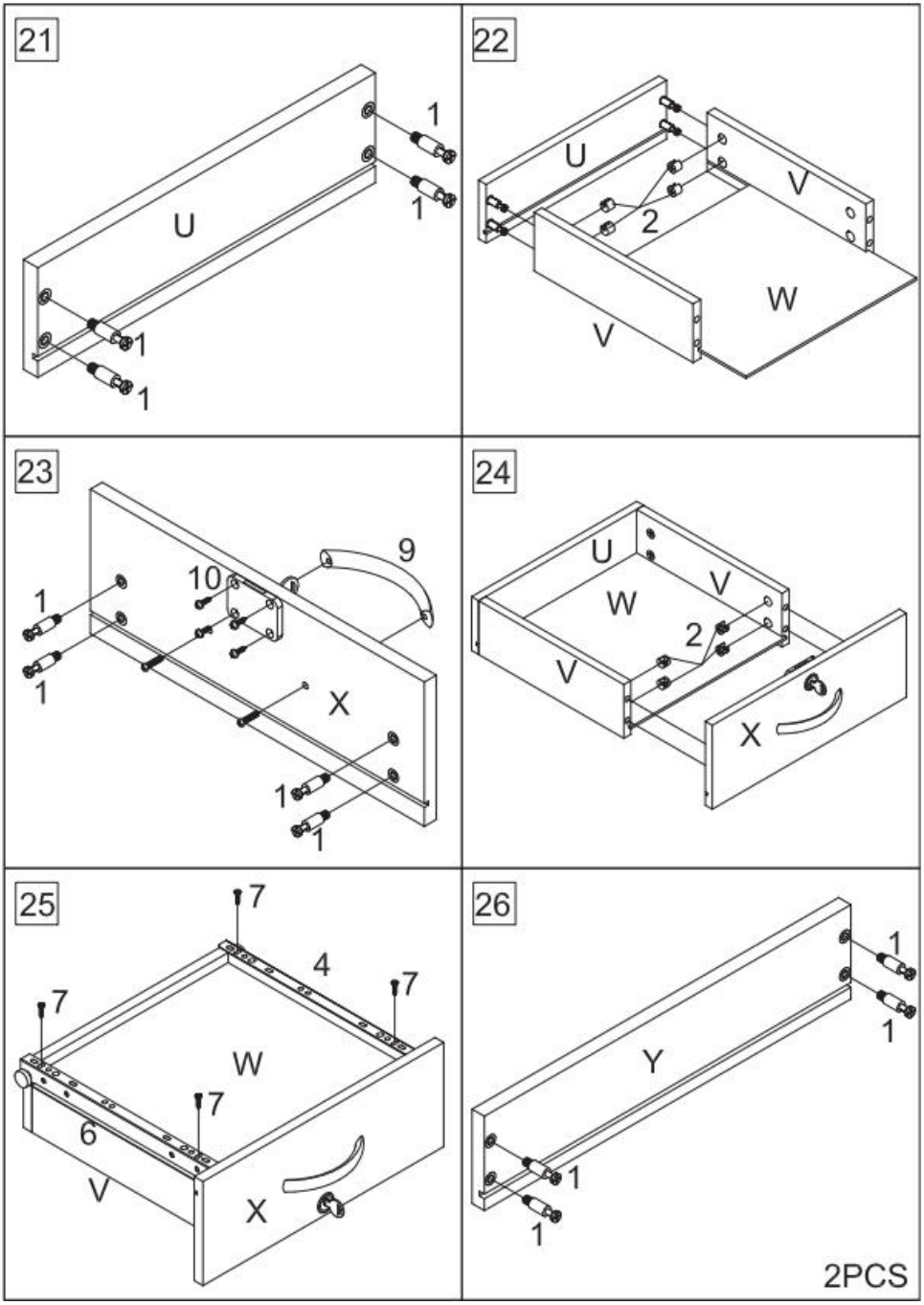
21
U
1
1
1
1
22
U
V
2
W
V
23
9
10
1
1
X
1
1
24
U
V
W
2
V
X
25
7
4
7
7
W
7
6
V
X
26
1
1
Y
1
1
2PCS

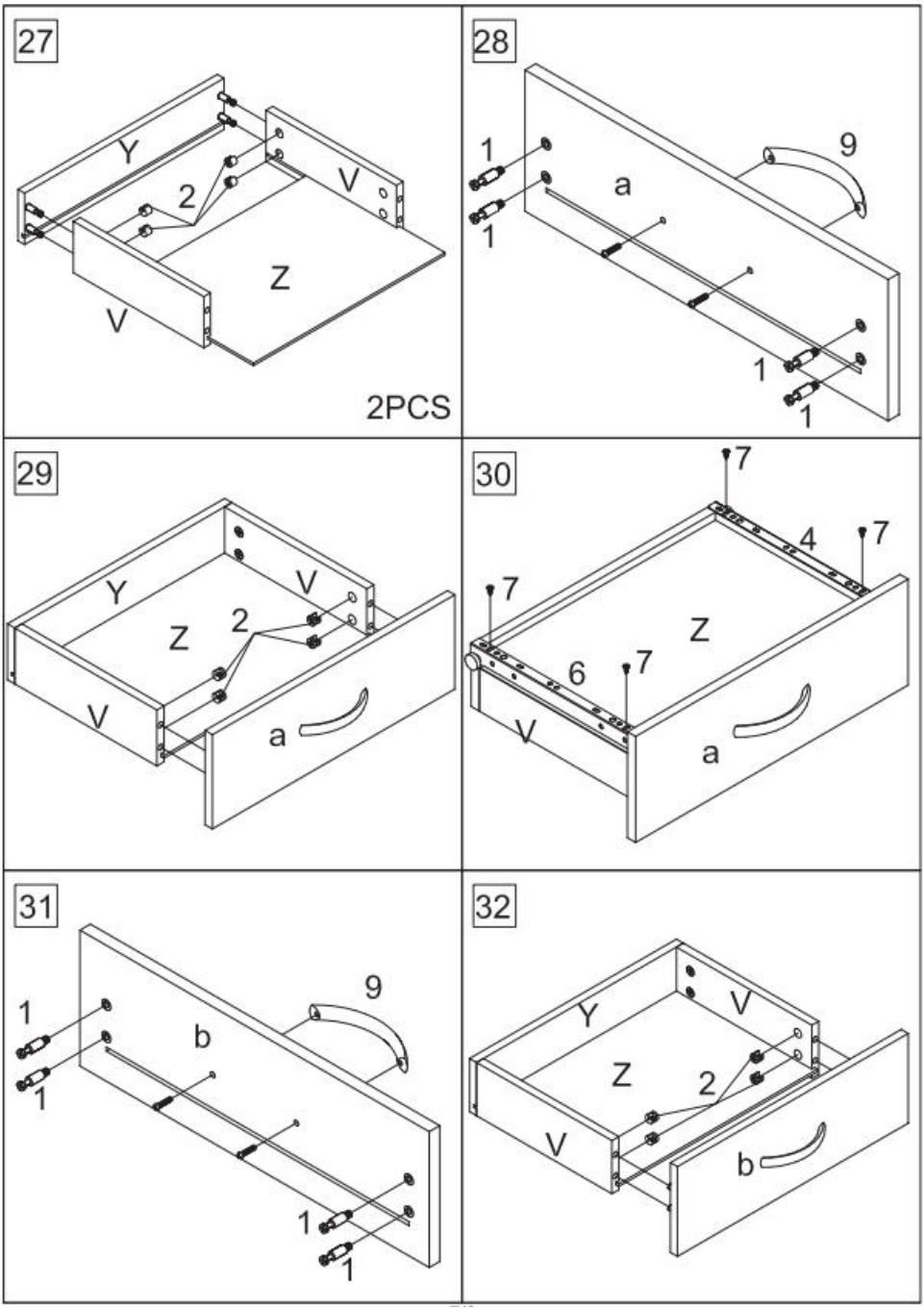
27
Y
2
V
Z
V
2PCS
28
1
9
a
1
1
1
29
Y
V
Z
2
V
a
30
7
4
7
7
Z
6
7
V
a
31
1
9
b
1
1
1
32
Y
V
Z
2
V
b

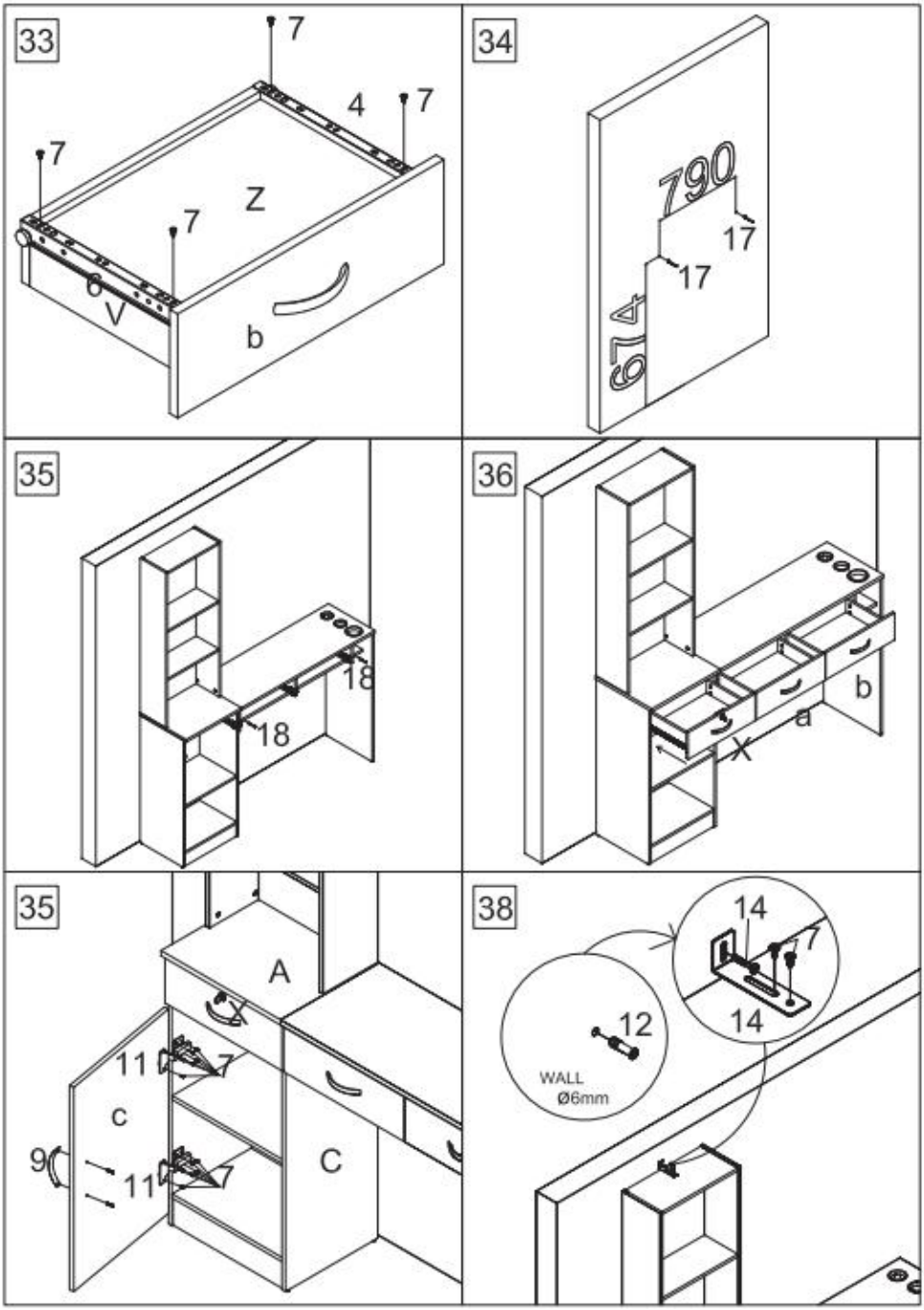
33
7
4
7
7
Z
7
6
V
b
34
790
17
17
614
35
18
18
36
b
a
X
35
A
11
7
c
9
11
7
C
38
14
7
14
12
WALL
Ø6mm

PRODUCT PARAMETER

Grootte (mm)	1290*330*1770
Kleur	Zwart
Type	3 laden
Textuur	MDF+hittebestendige legering
Hendel	Aluminium profiel

VEVOR®

TOUGH TOOLS, HALF PRICE

Technisch Ondersteuning en e-garantiecertificaat

www.vevor.com/support

VEVOR®

TOUGH TOOLS, HALF PRICE

Teknisk Support och e-garanticertifikat www.vevor.com/support

SALONG STATION

Användarmanual _

We continue to be committed to provide you tools with competitive price.
"Save Half", "Half Price" or any other similar expressions used by us only represents an estimate of savings you might benefit from buying certain tools with us compared to the major top brands and does not necessarily mean to cover all categories of tools offered by us. You are kindly reminded to verify carefully when you are placing an order with us if you are actually saving half in comparison with the top major brands.

VEVOR®

TOUGH TOOLS, HALF PRICE

SALON STATION

MODELL: WC1001

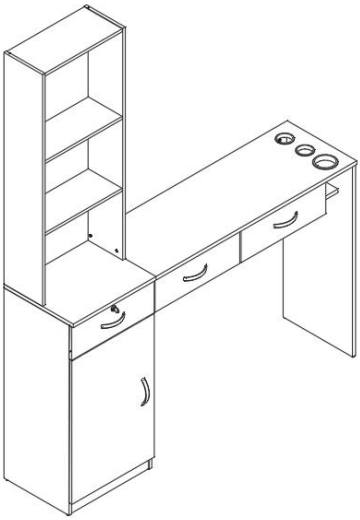

NEED HELP? CONTACT US!

Have product questions? Need technical support? Please feel free to contact us:

Technical Support and E-Warranty Certificate
www.vevor.com/support

This is the original instruction, please read all manual instructions carefully before operating. VEVOR reserves a clear interpretation of our user manual. The appearance of the product shall be subject to the product you received. Please forgive us that we won't inform you again if there are any technology or software updates on our product.

VARNING:

Läs dessa instruktioner noggrant innan du använder denna produkt. Underlåtenhet att göra det kan resultera i allvarliga skador.

Försiktighetsåtgärder vid montering

33. Endast montering ska ske enligt dessa instruktioner. Felaktig montering kan leda till faror.
34. Använd ANSI-godkända skyddsglasögon och kraftiga arbetshandskar vid montering.
35. Håll monteringsområdet rent och väl upplyst.
36. Håll åskådare borta från området under monteringen.
37. Sätt dig inte ihop när du är trött eller påverkad av alkohol, droger eller mediciner.
38. Produktegenskaperna gäller endast för korrekt och färdigmonterade produkter.
39. Montera på en plan, jämn, hård och slät yta som säkert kan stödja Salongstationen.
40. För ytterligare information om delarna som listas på följande sidor, se monteringsdiagrammet i denna manual. Packa upp och separera alla delar på ett rent arbetsområde.

Använd försiktighetsåtgärder

25. SIT ELLER STÅ INTE PÅ DETTA FÖREMÅL.
26. Denna produkt är inte en leksak. Låt inte barn leka med eller nära detta föremål.
27. Överskrid inte viktkapaciteten.
28. Använd endast på en plan, jämn, hård och slät yta som säkert kan stödja en fullastad salongsstation .
29. Använd endast som avsett.
30. Inspektera före varje användning; Använd inte om delar är lösa eller skadade.

SPARA DESSA INSTRUKTIONER

PARTS LIST

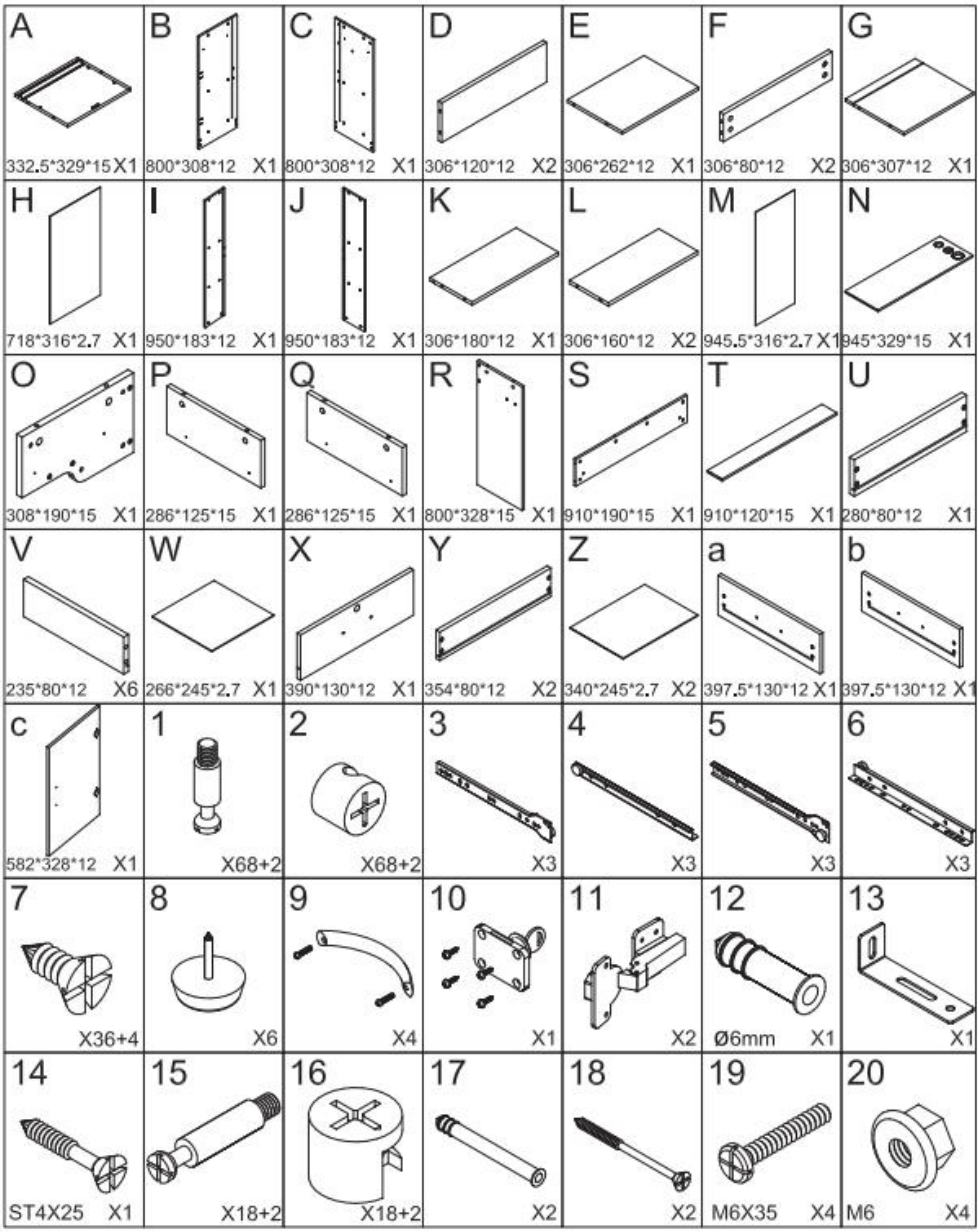

ASSEMBLY INSTRUCTION

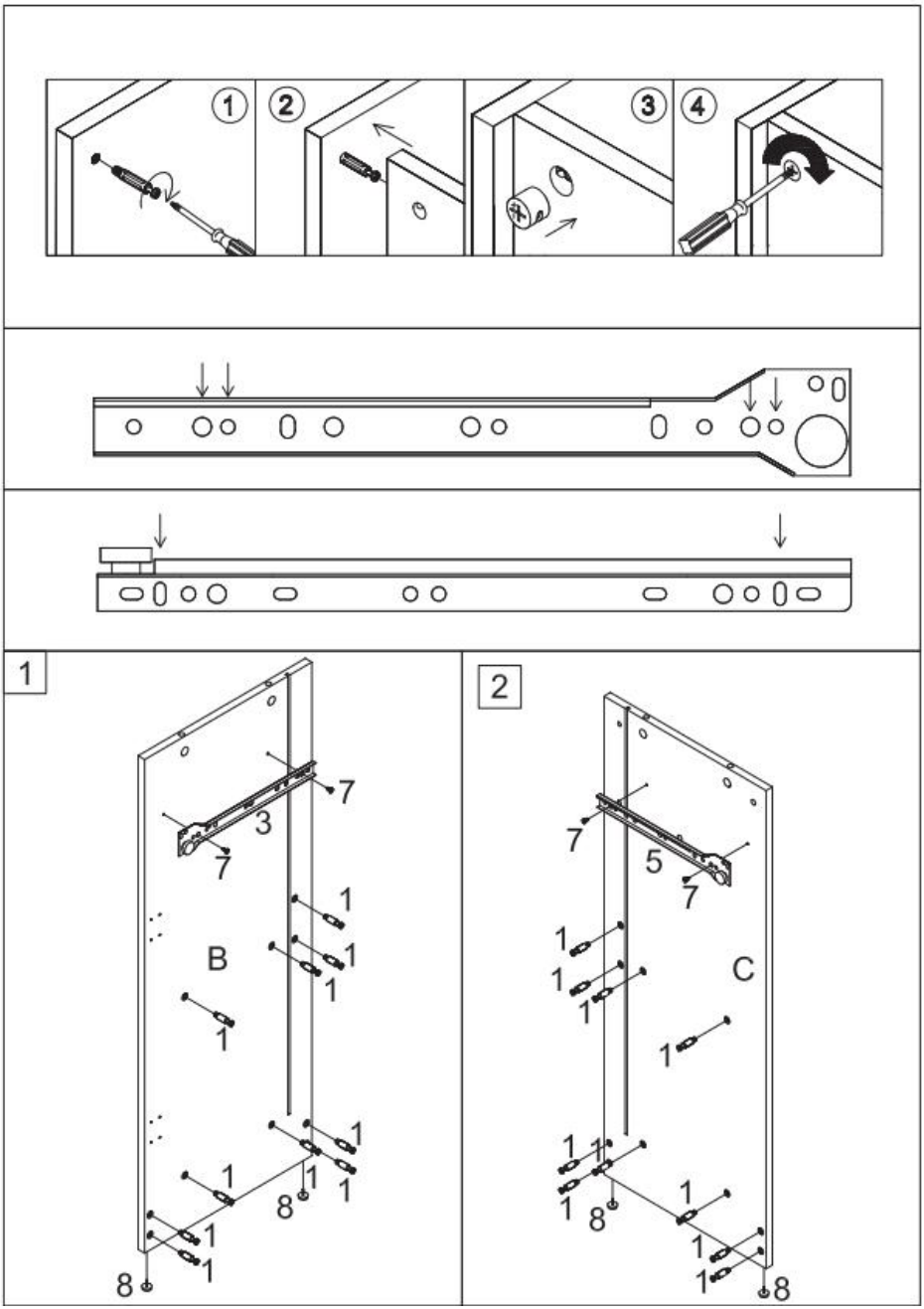

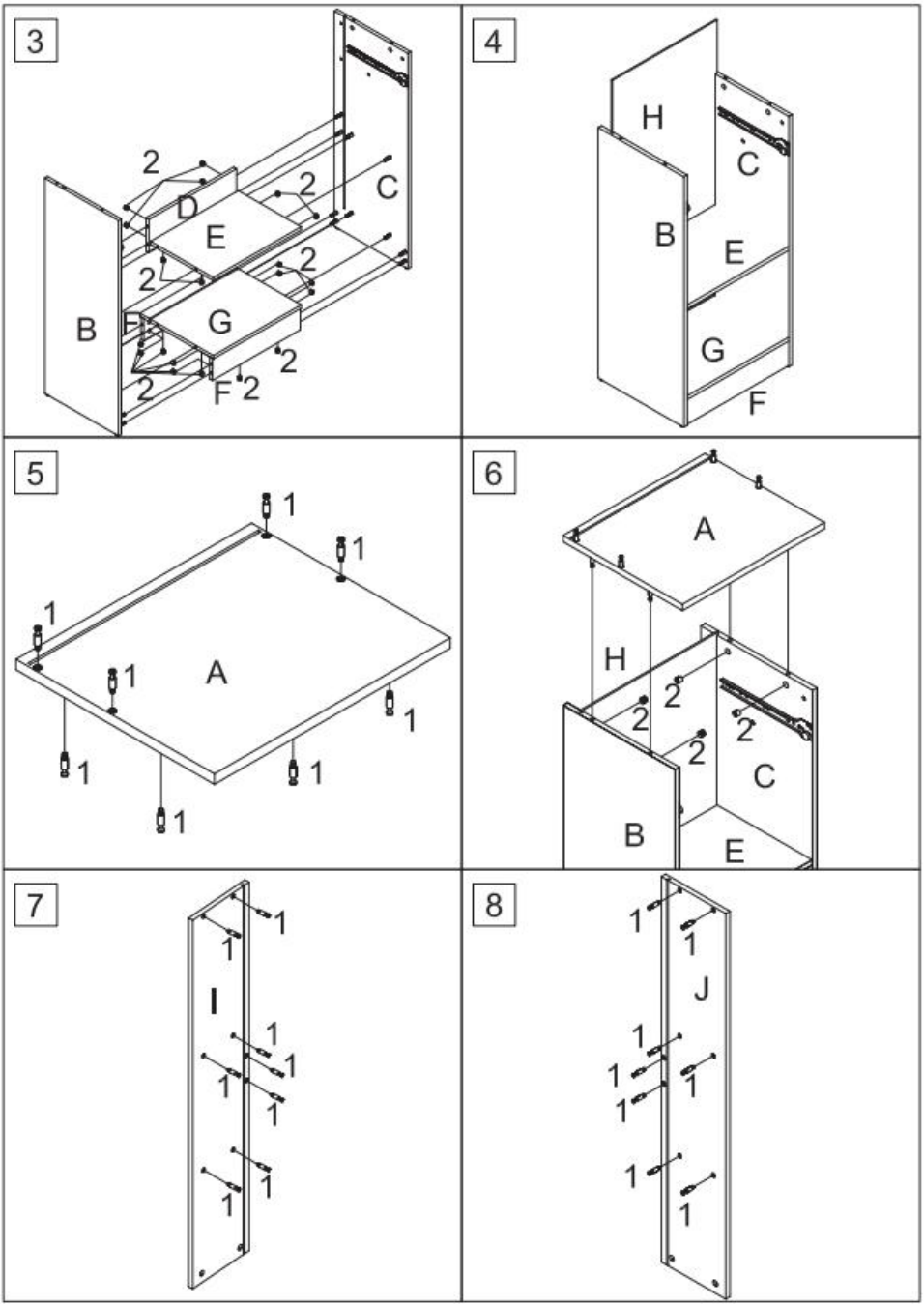
3
2
D
2
C
E
2
2
B
F
G
2
2
F
2
4
H
C
B
E
G
F
5
1
1
1
1
A
1
1
1
1
6
A
H
2
2
2
2
C
B
E
7
1
1
I
1
1
1
1
1
1
8
1
1
J
1
1
1
1
1
1

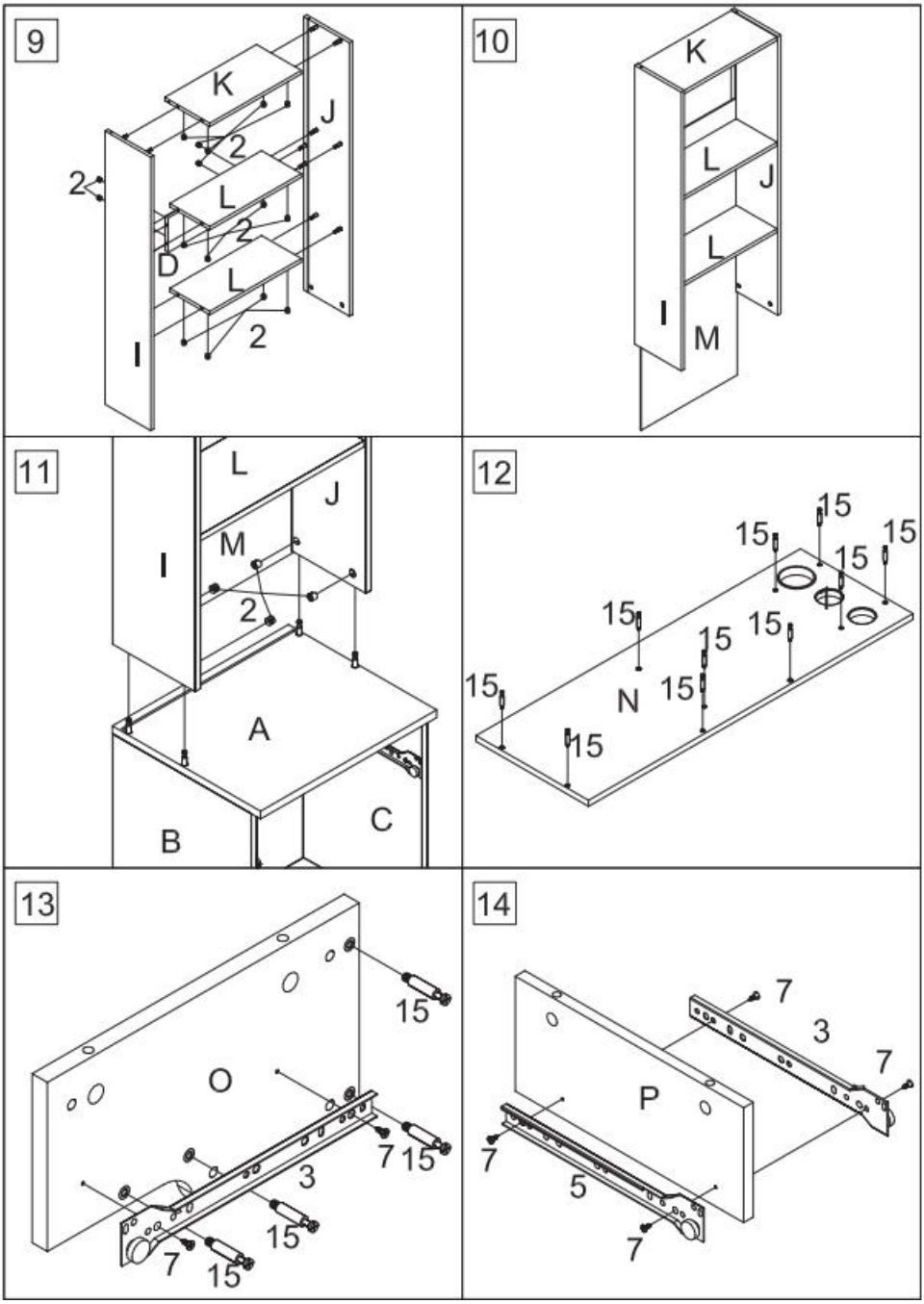
9
K
J
2
2
L
2
D
L
2
I
10
K
L
J
L
I
M
11
L
J
M
I
2
A
B
C
12
15
15
15
15
15
15
15
15
N
15
15
13
15
O
7
15
3
15
7
15
14
7
3
7
P
7
5
7

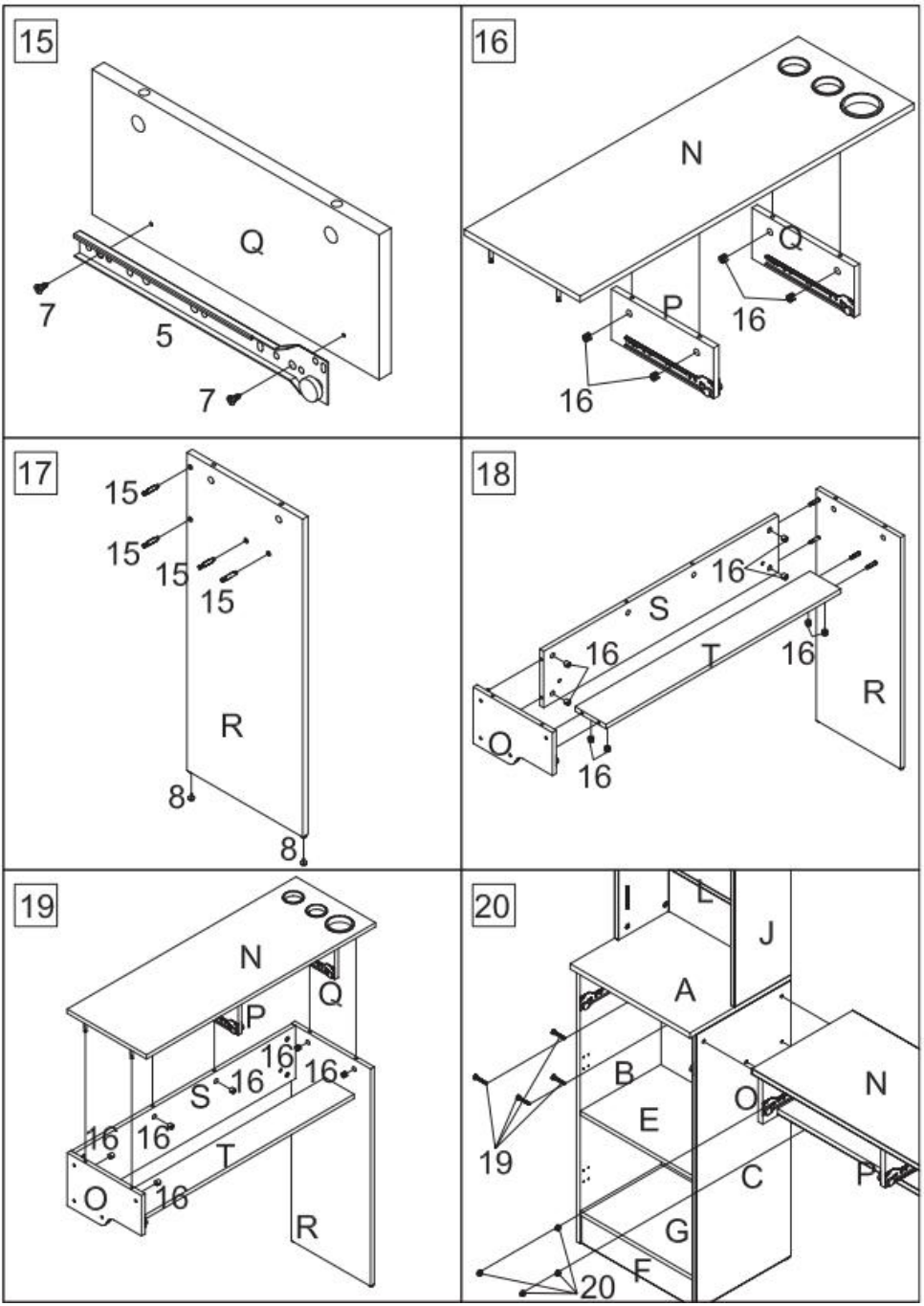
15
Q
7
5
7
16
N
Q
P
16
16
17
15
15
15
15
R
8
8
18
16
S
16
T
16
R
Q
16
19
N
Q
P
16
16
S
16
16
16
T
O
16
R
20
I
L
J
A
B
N
O
E
19
C
P
G
F
20

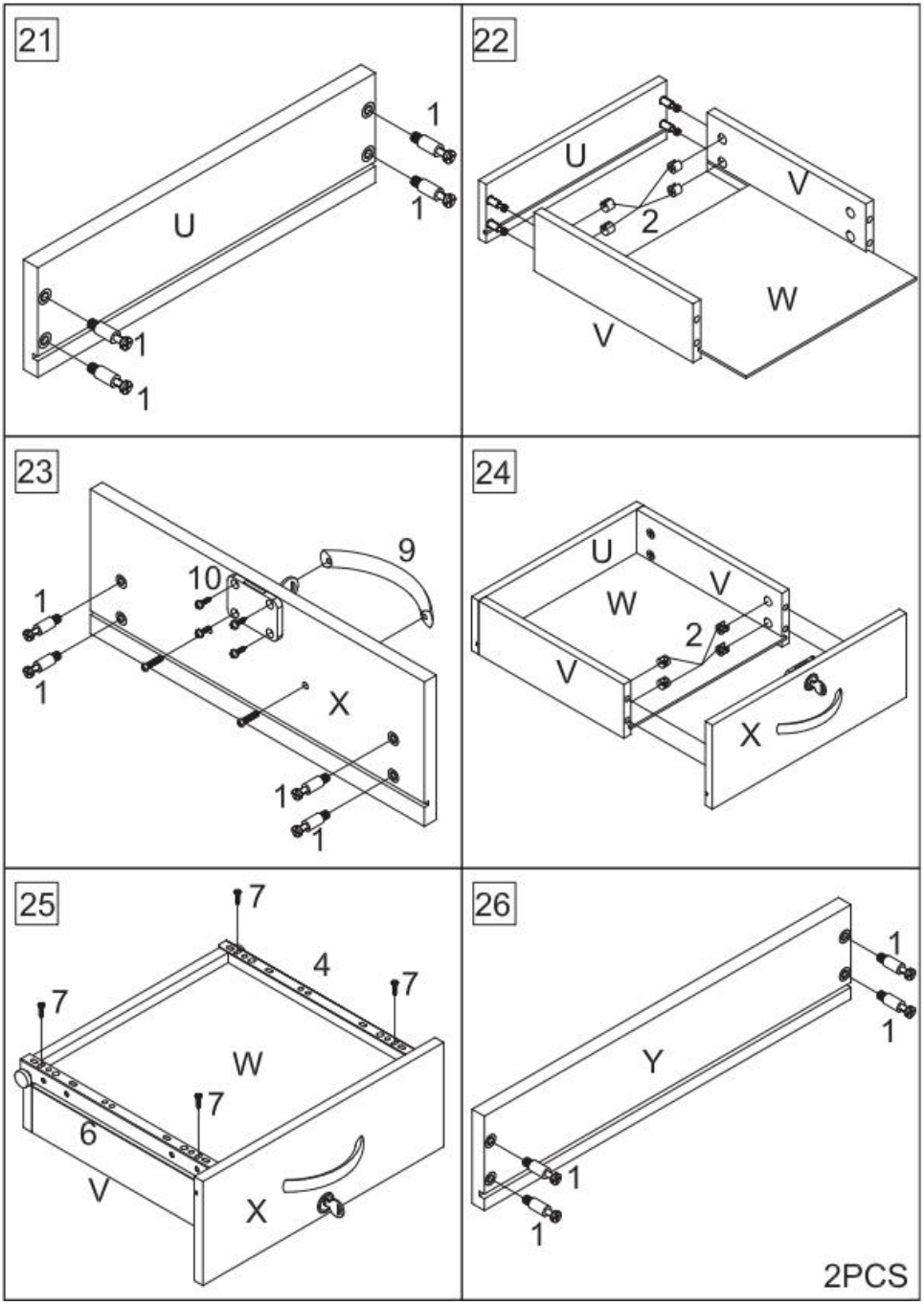
21
U
1
1
1
1
22
U
V
2
W
V
23
9
10
1
1
X
1
1
24
U
V
W
2
V
X
25
7
4
7
7
W
7
6
V
X
26
1
1
Y
1
1
2PCS

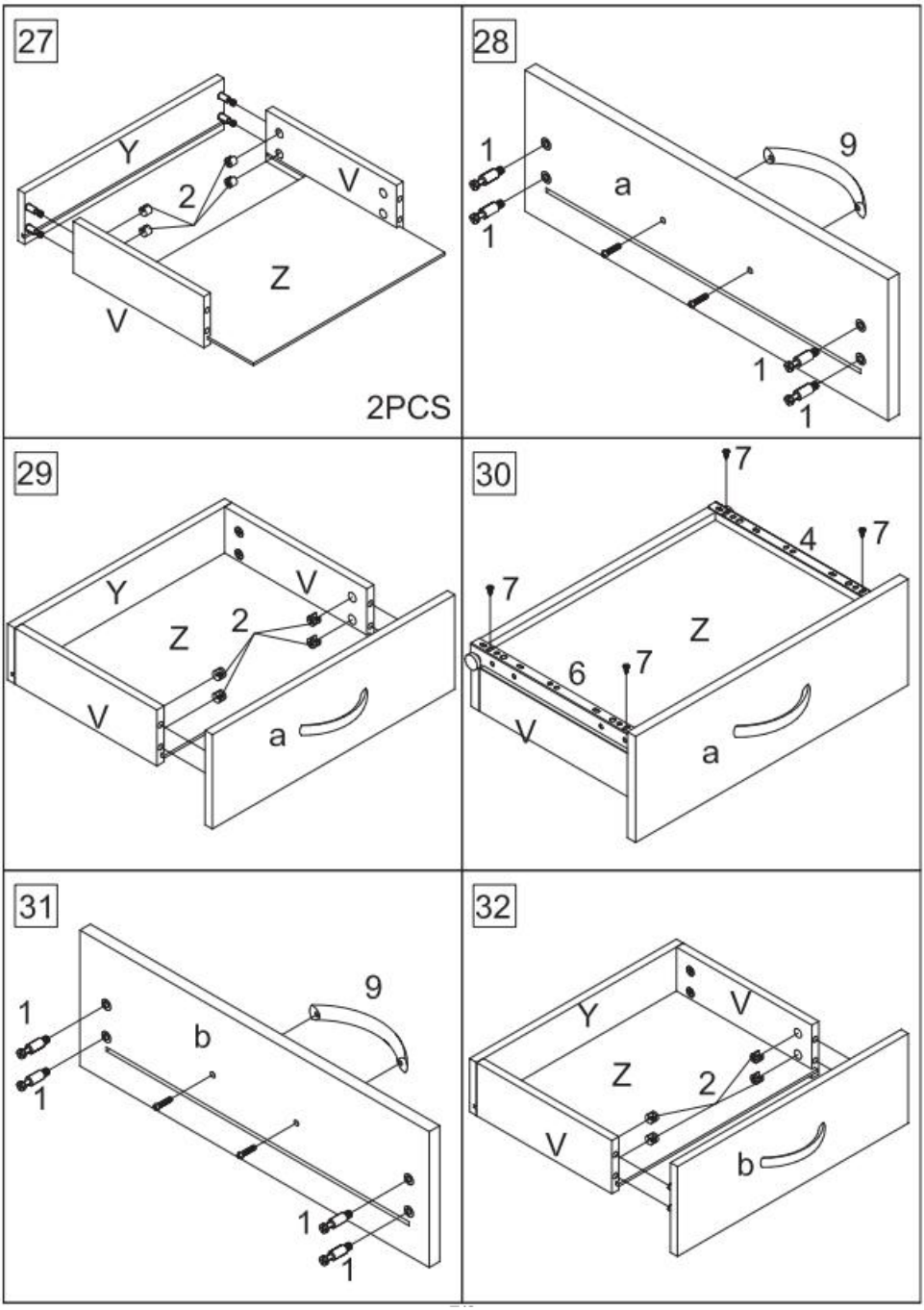
27
Y
2
V
Z
V
2PCS
28
1
9
a
1
1
1
29
Y
V
Z
2
V
a
30
7
4
7
7
Z
6
7
V
a
31
1
9
b
1
1
1
32
Y
V
Z
2
V
b

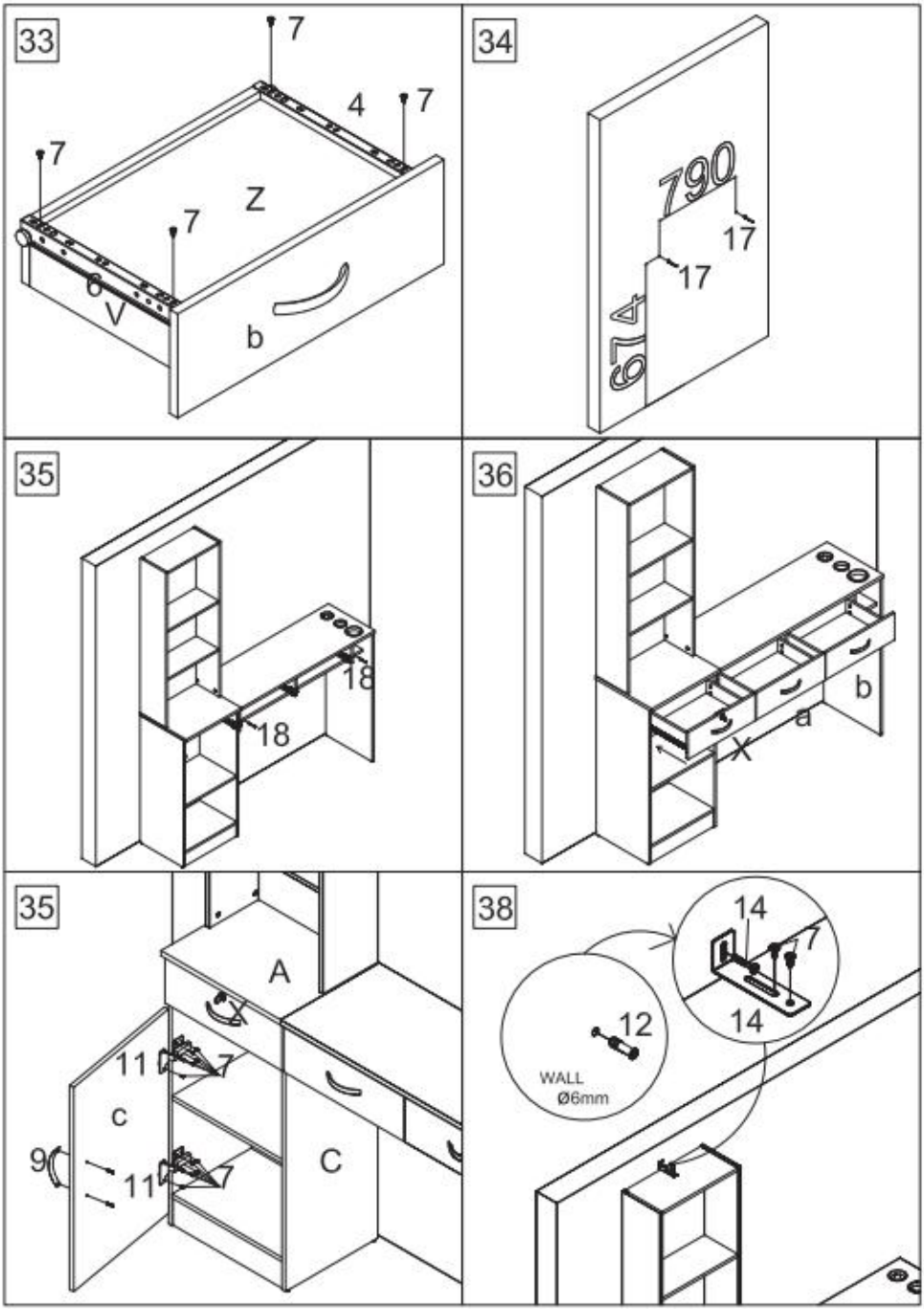
33
7
4
7
7
Z
7
6
V
b
34
790
17
17
614
35
18
18
36
b
a
X
35
A
11
7
c
9
11
7
C
38
14
7
14
12
WALL
Ø6mm

PRODUCT PARAMETER

Storlek (mm)	1290*330*1770
Färg	Svart
Typ	3 lådor
Textur	MDF+värmebeständig legering
Hantera	Aluminiumlegering

VEVOR®

TOUGH TOOLS, HALF PRICE

Teknisk Support och e-garanticertifikat

www.vevor.com/support

VEVOR®

TOUGH TOOLS, HALF PRICE

Técnico Soporte y certificado de garantía electrónica www.vevor.com/support

ESTACIÓN DE SALÓN

MANUAL DE usuario

We continue to be committed to provide you tools with competitive price.
"Save Half", "Half Price" or any other similar expressions used by us only represents an estimate of savings you might benefit from buying certain tools with us compared to the major top brands and does not necessarily mean to cover all categories of tools offered by us. You are kindly reminded to verify carefully when you are placing an order with us if you are actually saving half in comparison with the top major brands.

VEVOR®

TOUGH TOOLS, HALF PRICE

SALON STATION

MODELO: WC1001

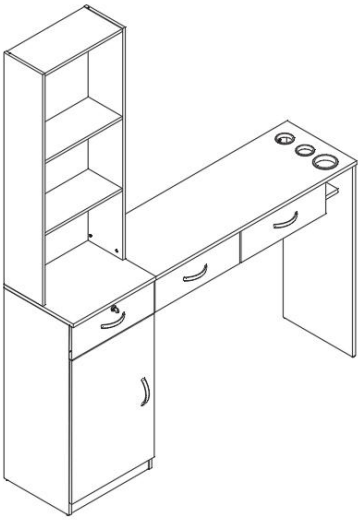

NEED HELP? CONTACT US!

Have product questions? Need technical support? Please feel free to contact us:

Technical Support and E-Warranty Certificate
www.vevor.com/support

This is the original instruction, please read all manual instructions carefully before operating. VEVOR reserves a clear interpretation of our user manual. The appearance of the product shall be subject to the product you received. Please forgive us that we won't inform you again if there are any technology or software updates on our product.

ADVERTENCIA:

Lea atentamente estas instrucciones antes de utilizar este producto. De lo contrario, se pueden producir lesiones graves.

Precauciones de montaje

41. El montaje únicamente debe realizarse de acuerdo con estas instrucciones. Un montaje inadecuado puede provocar peligros.
42. Use gafas de seguridad aprobadas por ANSI y guantes de trabajo resistentes durante el montaje.
43. Mantenga el área de reunión limpia y bien iluminada.
44. Mantenga a los transeúntes fuera del área durante el montaje.
45. No se reúna cuando esté cansado o bajo la influencia de alcohol, drogas o medicamentos.
46. Las capacidades del producto se aplican únicamente a productos ensamblados de manera adecuada y completa.
47. Ensamble sobre una superficie plana, nivelada, dura y lisa capaz de soportar de manera segura Salon Station.
48. Para obtener información adicional sobre las piezas enumeradas en las siguientes páginas, consulte el diagrama de montaje de este manual. Desenvuelva y separe todas las piezas en un área de trabajo limpia.

Use precauciones

31. NO SE SIENTE NI SE PARE SOBRE ESTE ARTÍCULO.
32. Este producto no es un juguete. No permita que los niños jueguen con este artículo o cerca de él.
33. No exceda las capacidades de peso.
34. Úselo únicamente sobre una superficie plana, nivelada, dura y lisa capaz de soportar de manera segura una Salon Station completamente cargada .
35. Úselo únicamente según lo previsto.
36. Inspeccionar antes de cada uso; no lo utilice si las piezas están sueltas o dañadas.

GUARDA ESTAS INSTRUCCIONES

PARTS LIST

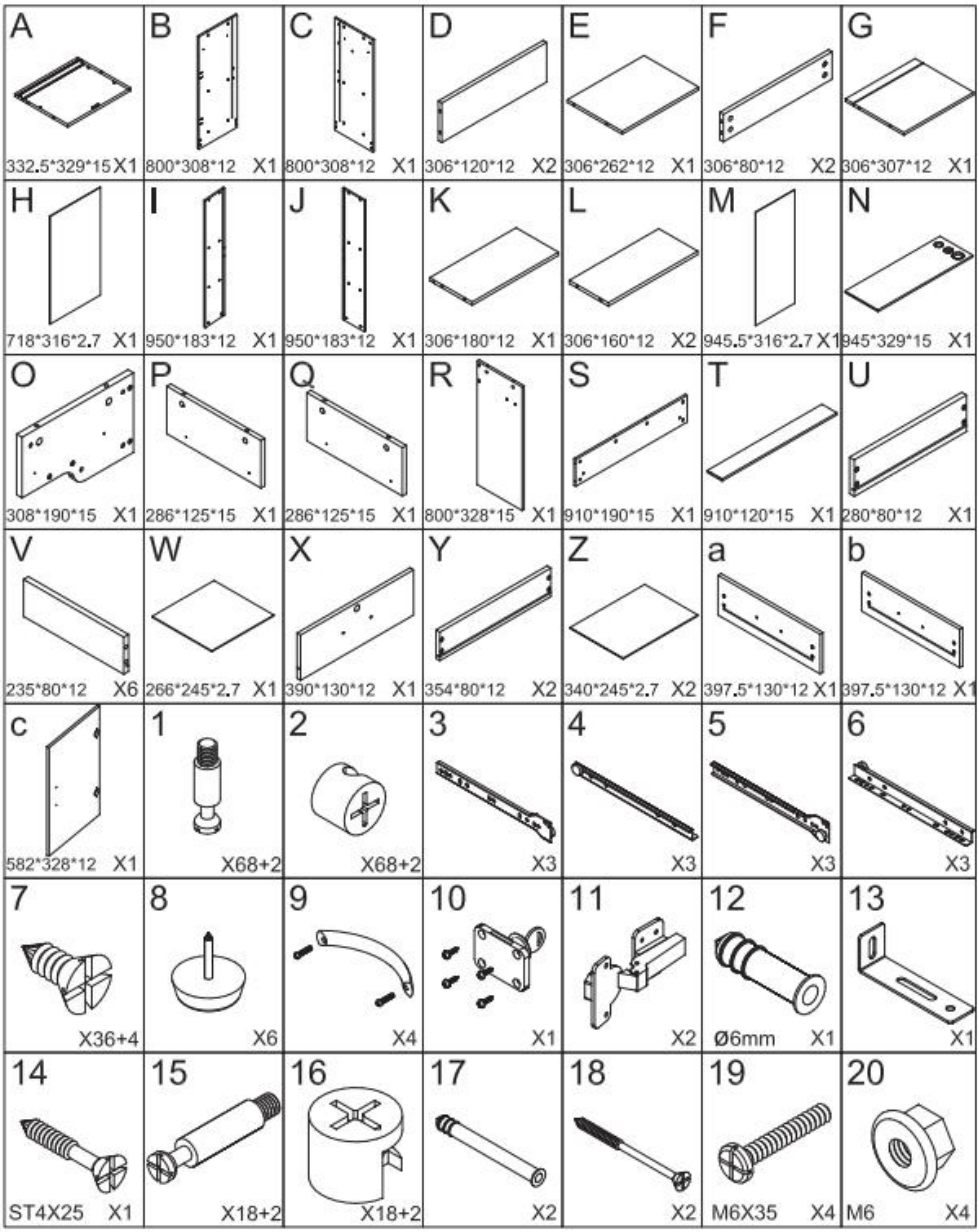

ASSEMBLY INSTRUCTION

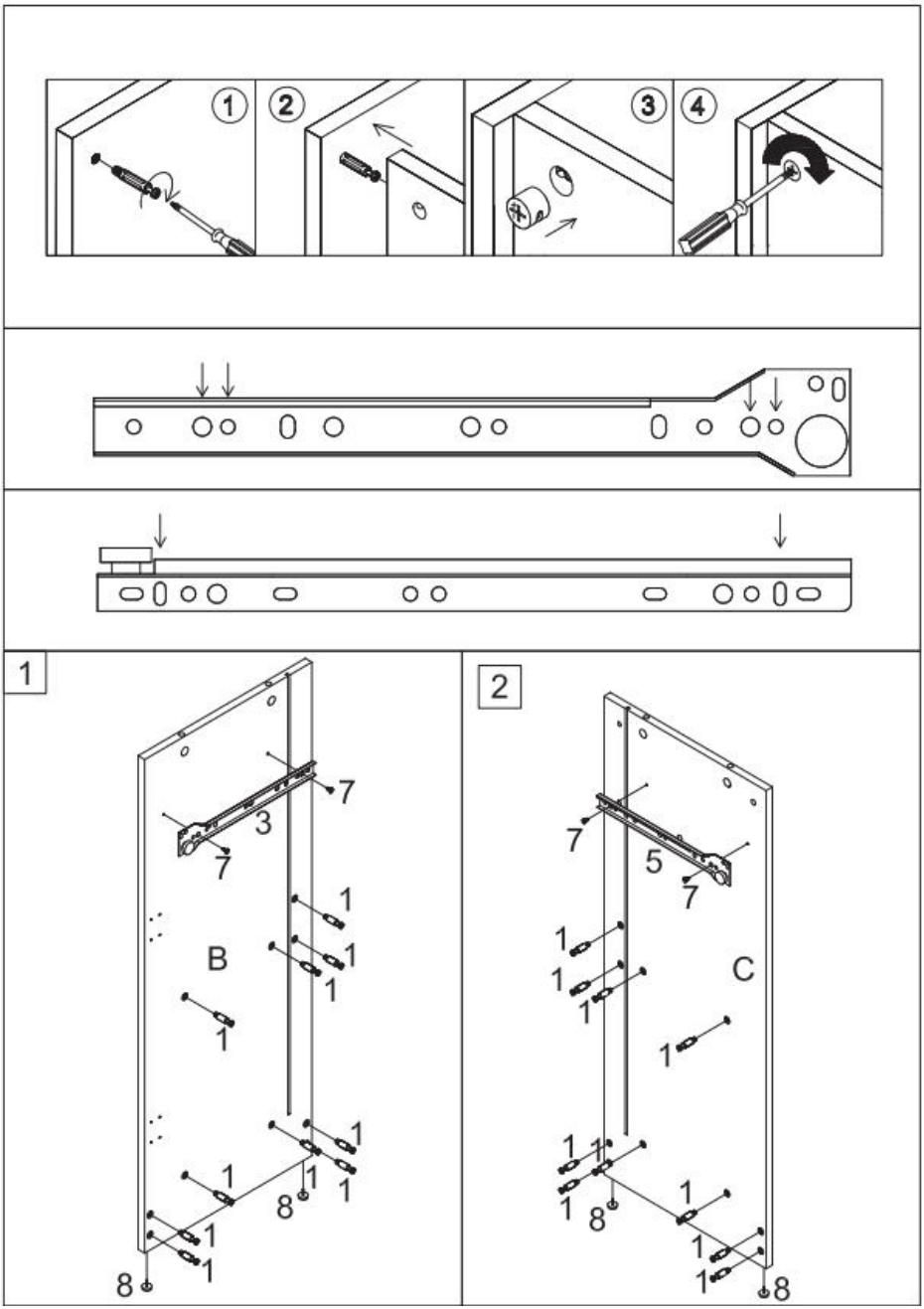

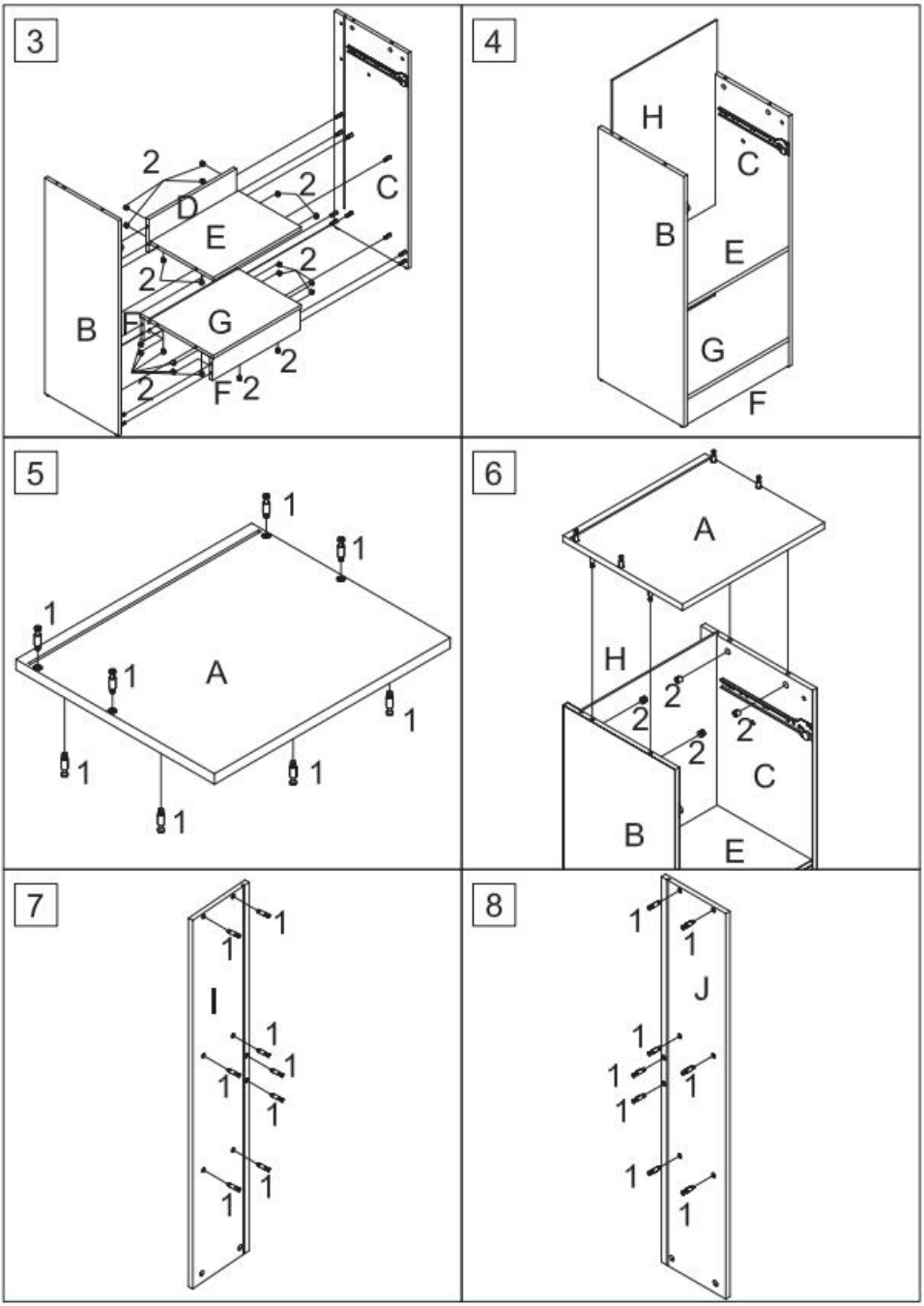
3
2
D
2
C
E
2
2
B
F
G
2
2
F
2
4
H
C
B
E
G
F
5
1
1
1
1
A
1
1
1
1
6
A
H
2
2
2
2
C
B
E
7
1
1
I
1
1
1
1
1
1
8
1
1
J
1
1
1
1
1
1

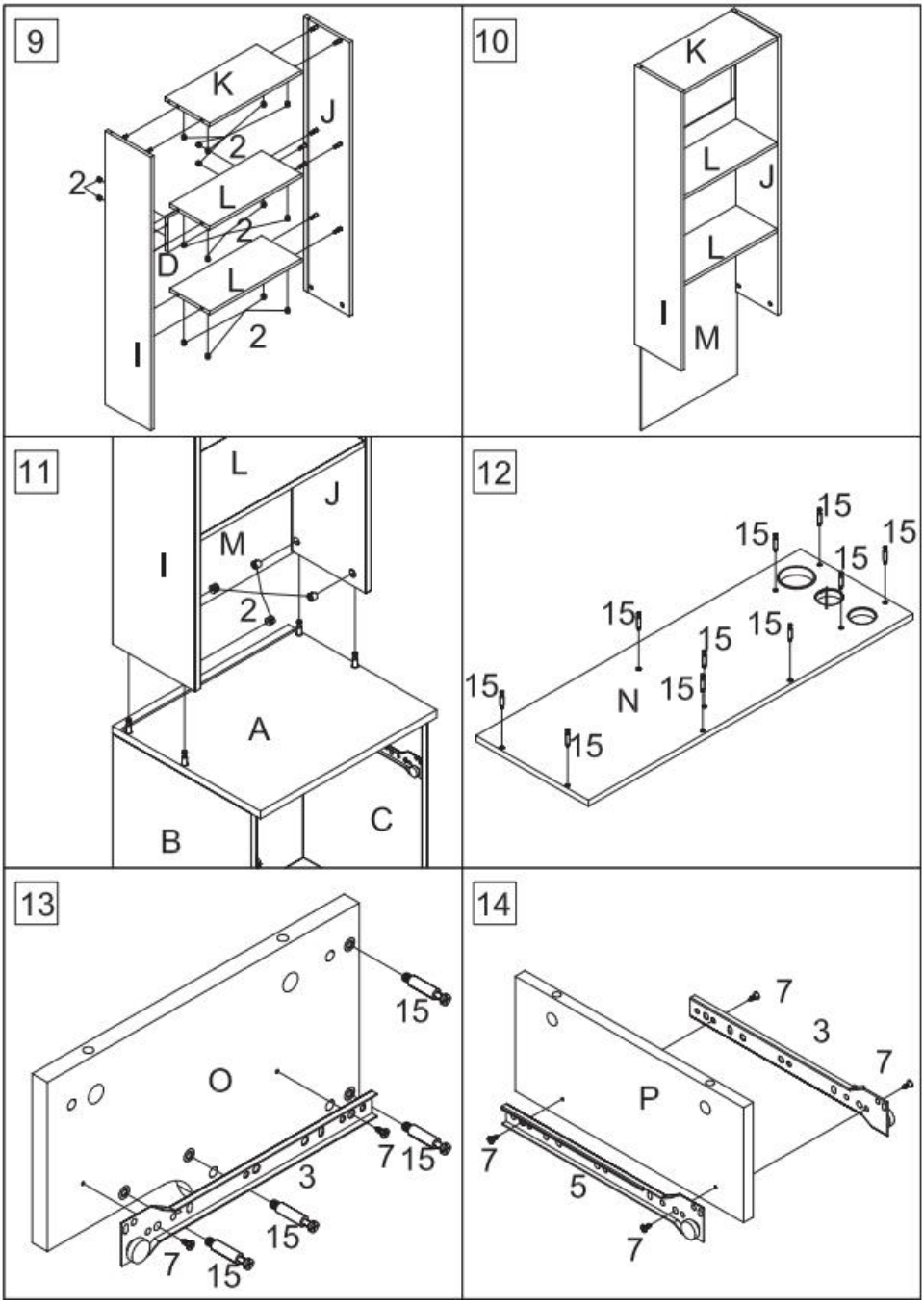
9
K
J
2
2
L
2
D
L
2
I
10
K
L
J
L
I
M
11
L
J
M
I
2
A
B
C
12
15
15
15
15
15
15
15
15
N
15
15
13
15
O
7
15
3
15
7
15
14
7
3
7
P
7
5
7

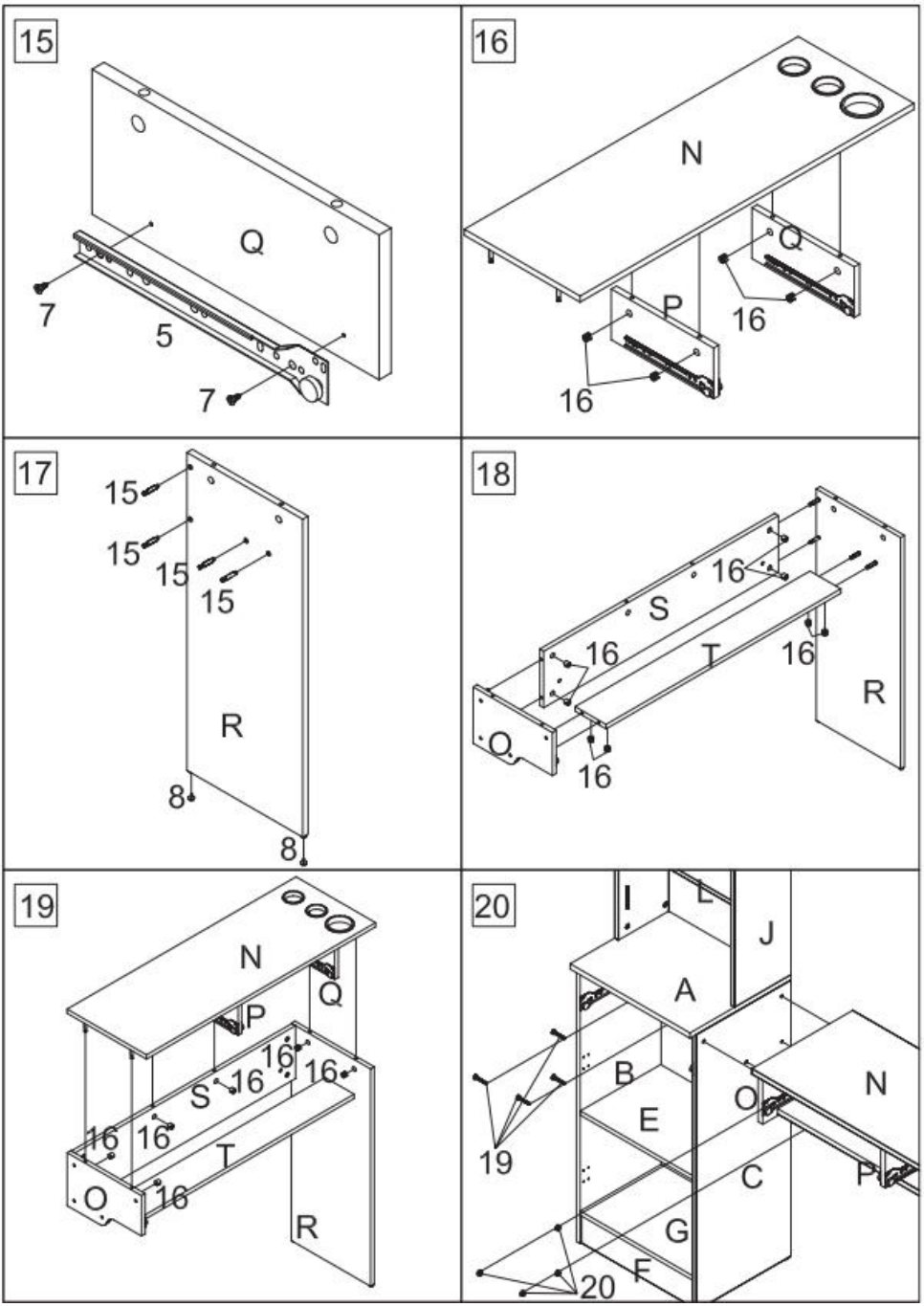
15
Q
7
5
7
16
N
Q
P
16
16
17
15
15
15
15
R
8
8
18
16
S
16
T
16
R
Q
16
19
N
Q
P
16
16
S
16
16
16
T
O
16
R
20
I
L
J
A
B
N
O
E
19
C
P
G
F
20

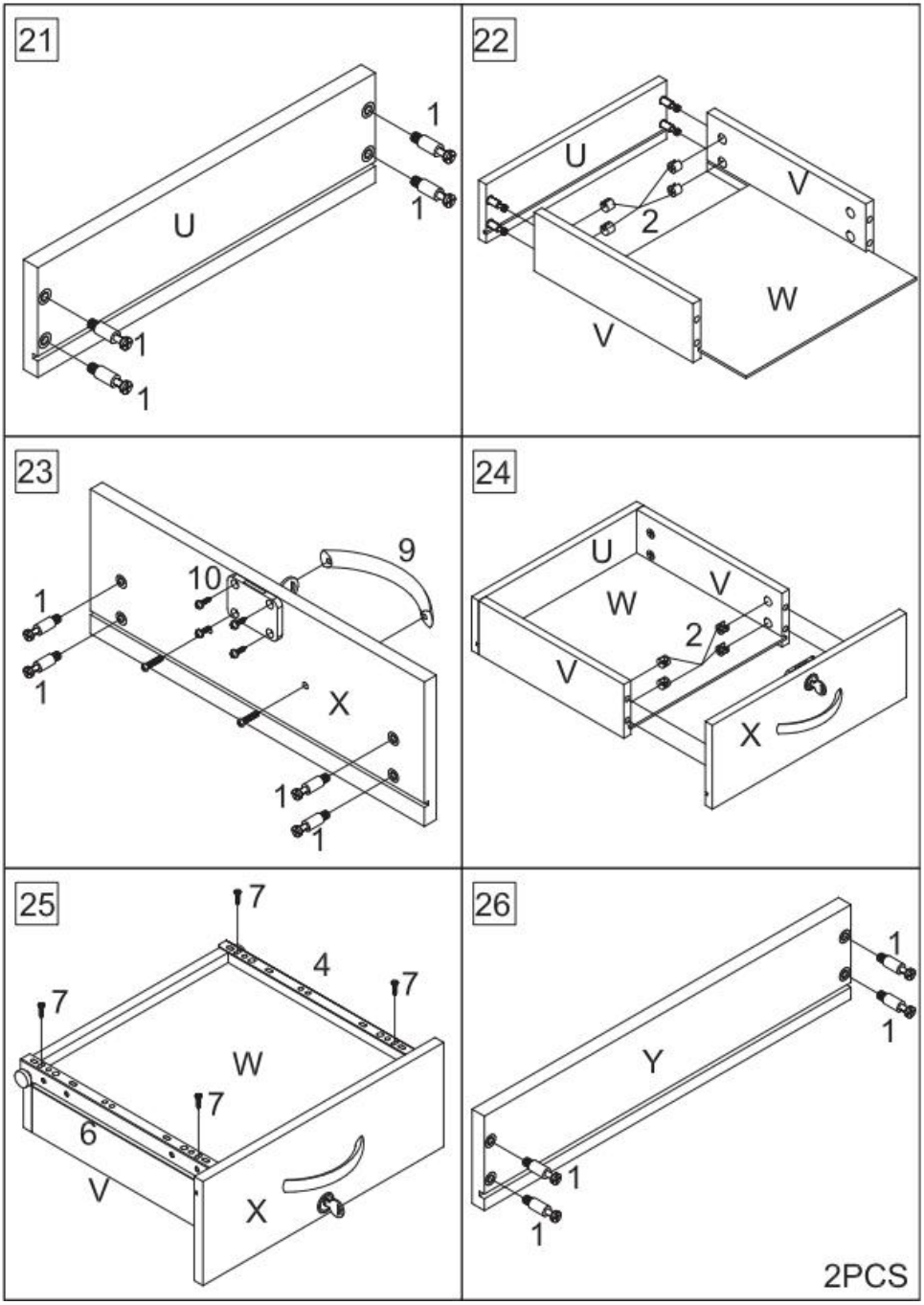
21
U
1
1
1
1
22
U
V
2
W
V
23
9
10
1
1
X
1
1
24
U
V
W
2
V
X
25
7
4
7
7
W
7
6
V
X
26
1
1
Y
1
1
2PCS

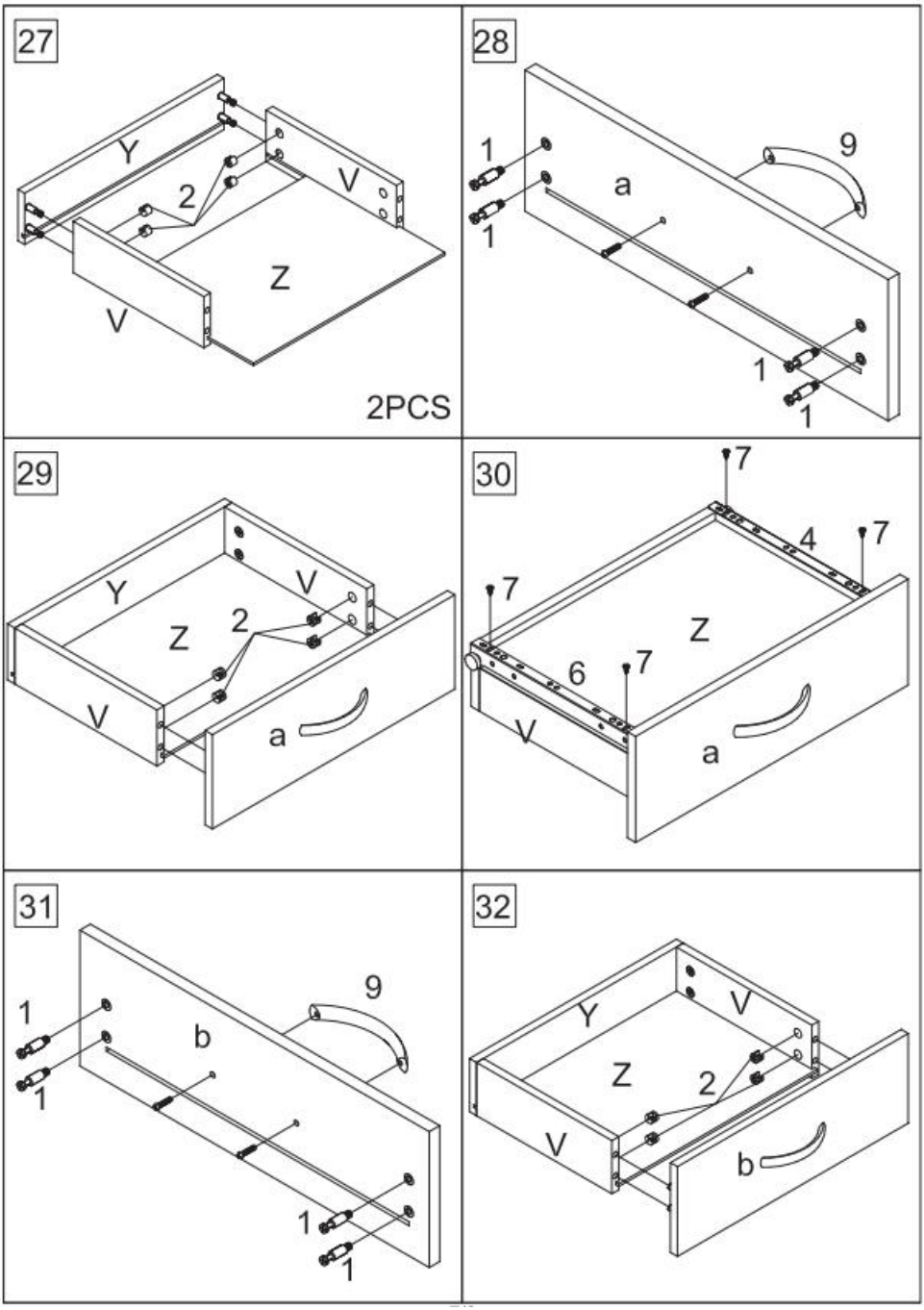
27
Y
2
V
Z
V
2PCS
28
1
9
a
1
1
1
29
Y
V
Z
2
V
a
30
7
4
7
7
Z
6
7
V
a
31
1
9
b
1
1
1
32
Y
V
Z
2
V
b

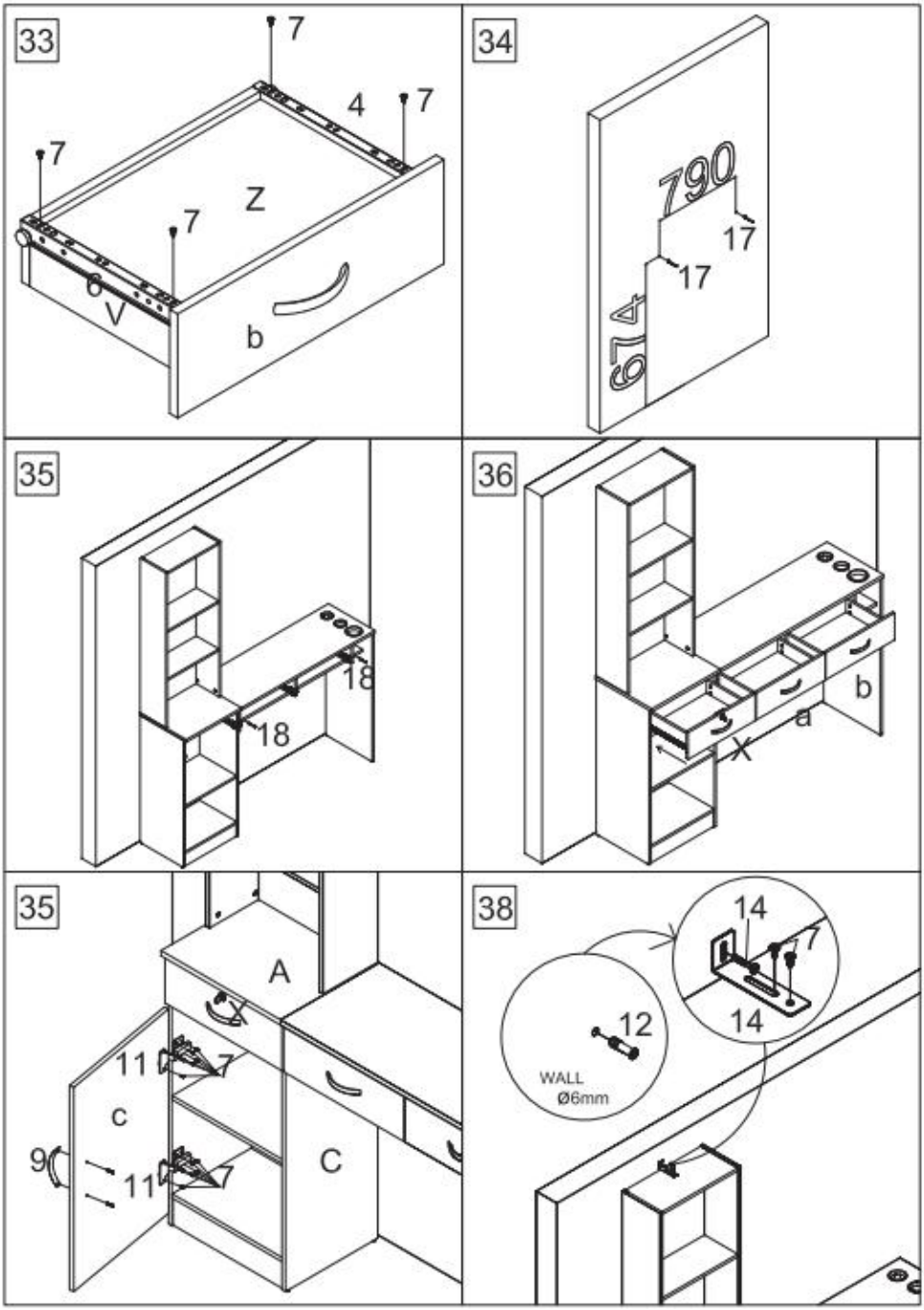
33
7
4
7
7
Z
7
6
V
b
34
790
17
17
614
35
18
18
36
b
a
X
35
A
11
7
c
9
11
7
C
38
14
7
14
12
WALL
Ø6mm

PRODUCT PARAMETER

Tamaño (mm)	1290*330*1770
Color	Negro
Tipo	3 cajones
Textura	MDF+Aleación resistente al calor
Manejar	Aleación de aluminio

VEVOR®

TOUGH TOOLS, HALF PRICE

Técnico Certificado de soporte y garantía electrónica

www.vevor.com/support

VEVOR®

TOUGH TOOLS, HALF PRICE

Tecnico Supporto e certificato di garanzia elettronica www.vevor.com/support

STAZIONE DEL SALONE

MANUALE D' uso

We continue to be committed to provide you tools with competitive price.
"Save Half", "Half Price" or any other similar expressions used by us only represents an estimate of savings you might benefit from buying certain tools with us compared to the major top brands and does not necessarily mean to cover all categories of tools offered by us. You are kindly reminded to verify carefully when you are placing an order with us if you are actually saving half in comparison with the top major brands.

VEVOR®

TOUGH TOOLS, HALF PRICE

SALON STATION

MODELLO: WC1001

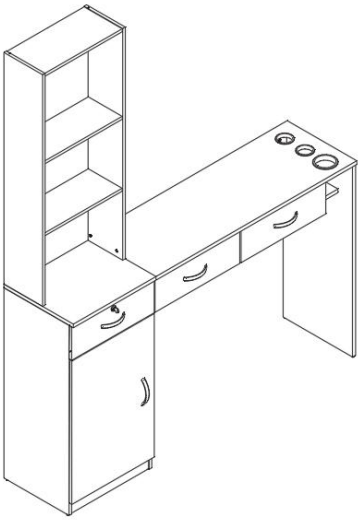

NEED HELP? CONTACT US!

Have product questions? Need technical support? Please feel free to contact us:

Technical Support and E-Warranty Certificate
www.vevor.com/support

This is the original instruction, please read all manual instructions carefully before operating. VEVOR reserves a clear interpretation of our user manual. The appearance of the product shall be subject to the product you received. Please forgive us that we won't inform you again if there are any technology or software updates on our product.

AVVERTIMENTO:

Leggere attentamente queste istruzioni prima di utilizzare questo prodotto. In caso contrario si potrebbero causare lesioni gravi.

Precauzioni per il montaggio

49. Solo il montaggio deve avvenire secondo queste istruzioni. Un montaggio improprio può causare pericoli.
50. Indossare occhiali di sicurezza approvati ANSI e guanti da lavoro pesanti durante il montaggio.
51. Mantenere l'area di assemblaggio pulita e ben illuminata.
52. Tenere gli astanti lontani dall'area durante il montaggio.
53. Non montare in caso di stanchezza o sotto l'effetto di alcol, droghe o farmaci.
54. Le funzionalità del prodotto si applicano solo ai prodotti correttamente e completamente assemblati.
55. Montare su una superficie piana, livellata, dura e liscia in grado di sostenere in sicurezza la Salon Station.
56. Per ulteriori informazioni riguardanti le parti elencate nelle pagine seguenti, fare riferimento allo Schema di Montaggio di questo manuale. Scartare e separare tutte le parti in un'area di lavoro pulita.

Usare precauzioni

37. NON SEDERSI O STARE IN PIEDI SU QUESTO ARTICOLO.
38. Questo prodotto non è un giocattolo. Non permettere ai bambini di giocare con o vicino a questo oggetto.
39. Non superare le capacità di peso.
40. Utilizzare solo su una superficie piana, livellata, dura e liscia in grado di supportare in sicurezza una stazione per saloni a pieno carico .
41. Utilizzare solo come previsto.
42. Ispezionare prima di ogni utilizzo; non utilizzare se le parti sono allentate o danneggiate.

CONSERVARE QUESTE ISTRUZIONI

PARTS LIST

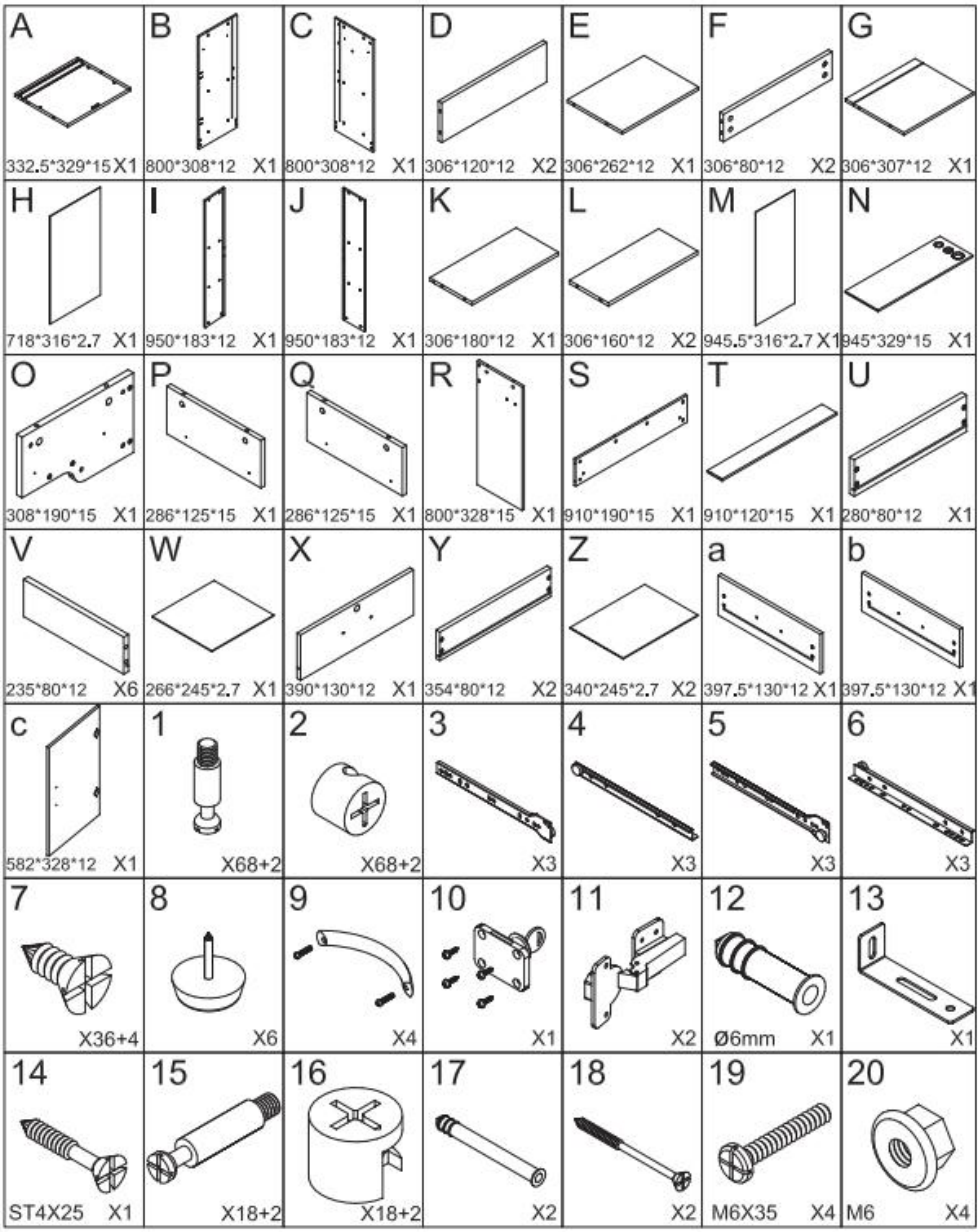

ASSEMBLY INSTRUCTION

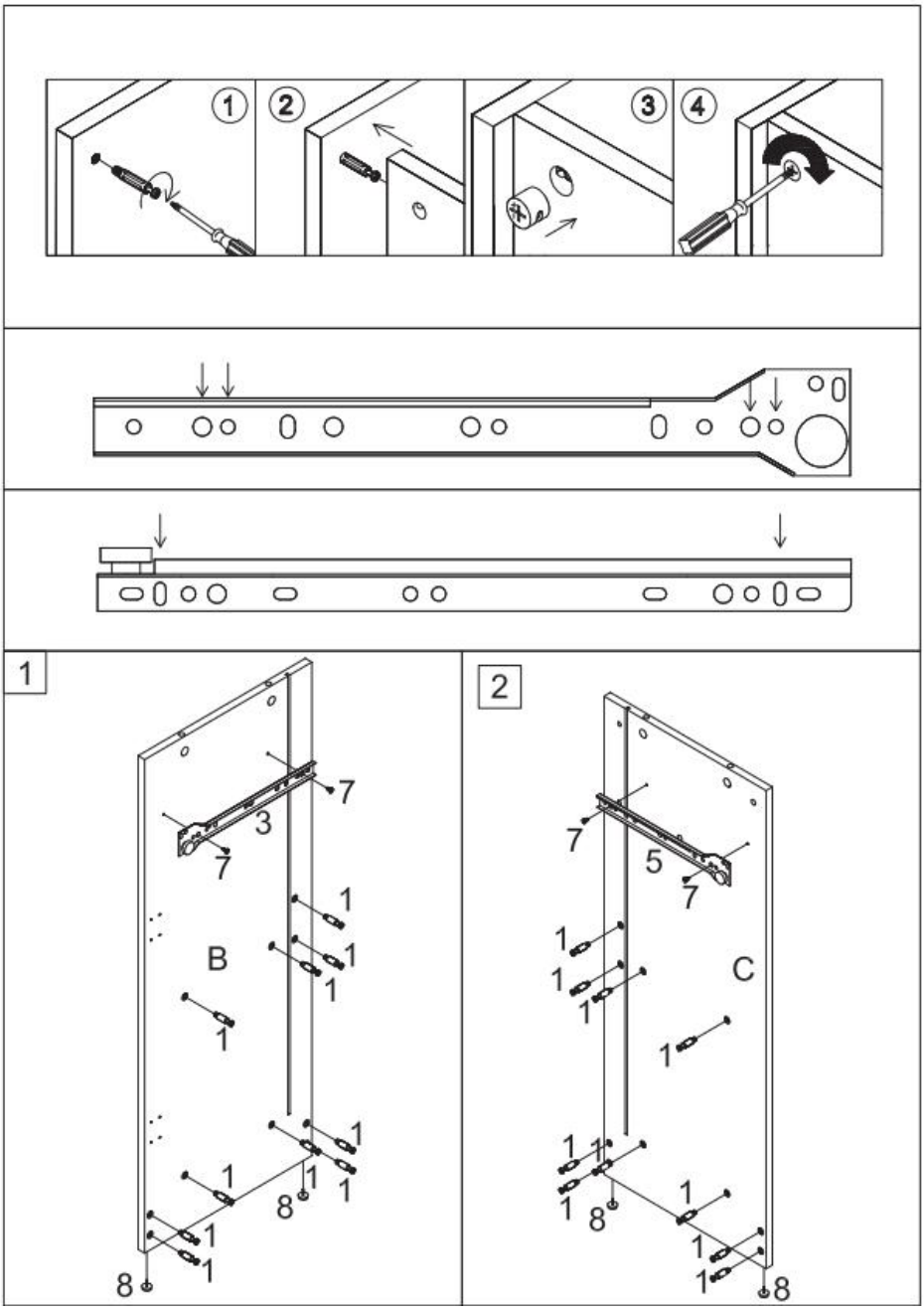

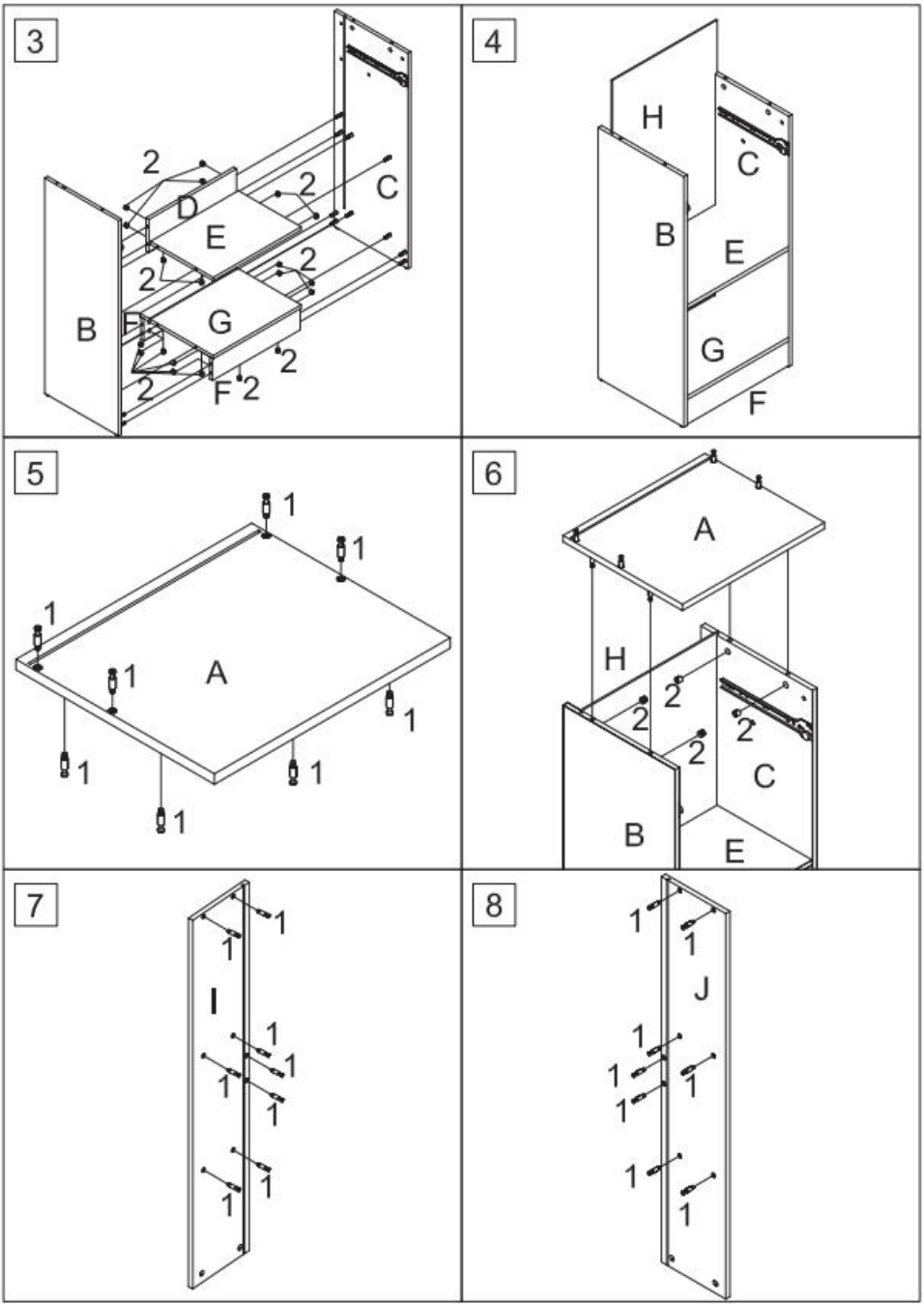
3
2
D
2
C
E
2
2
B
F
G
2
2
F
2
4
H
C
B
E
G
F
5
1
1
1
1
A
1
1
1
1
6
A
H
2
2
2
2
C
B
E
7
1
1
I
1
1
1
1
1
1
8
1
1
J
1
1
1
1
1
1

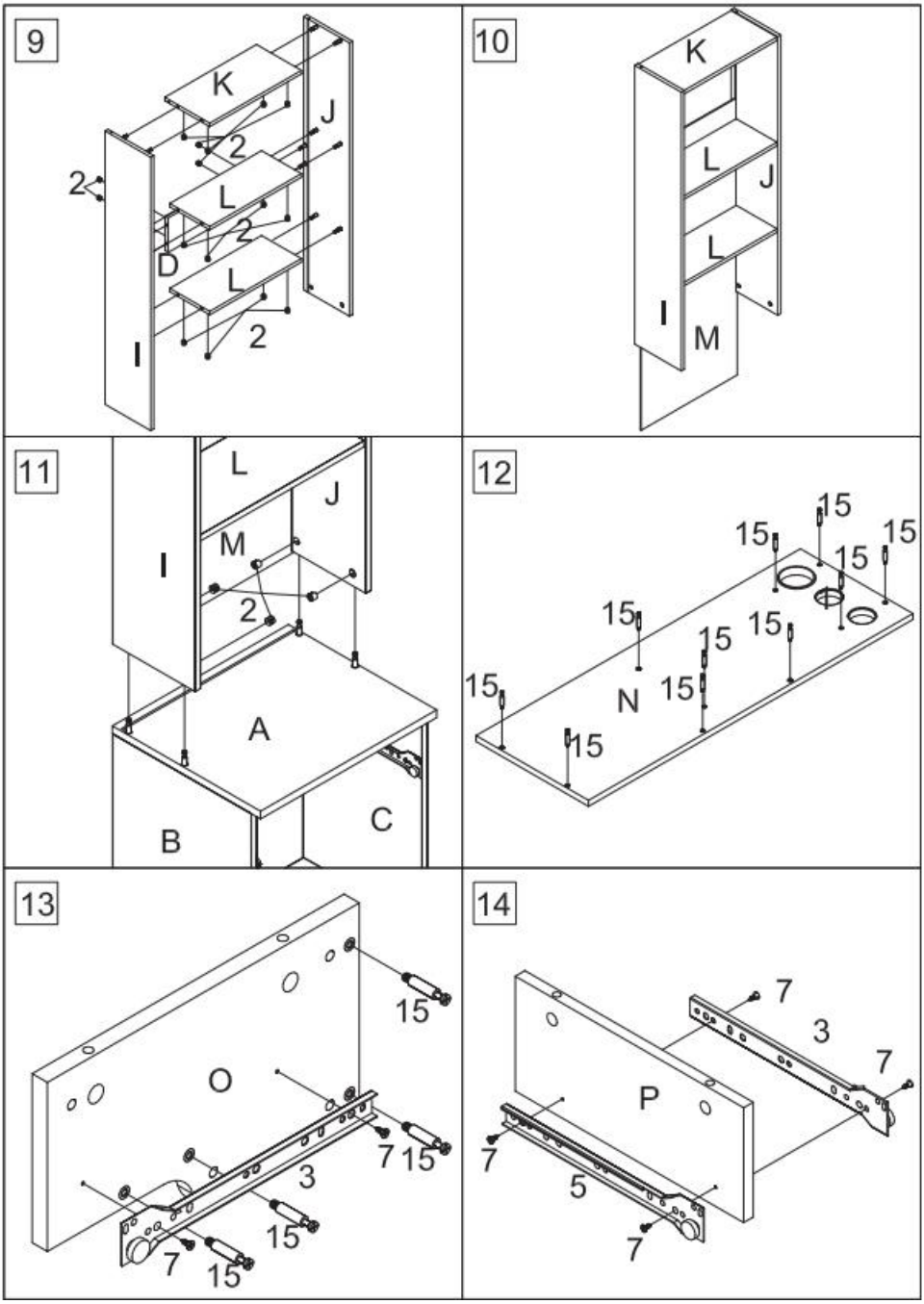
9
K
J
2
2
L
2
D
L
2
I
10
K
L
J
L
I
M
11
L
J
M
I
2
A
B
C
12
15
15
15
15
15
15
15
15
N
15
15
13
15
O
7
15
3
15
7
15
14
7
3
7
P
7
5
7

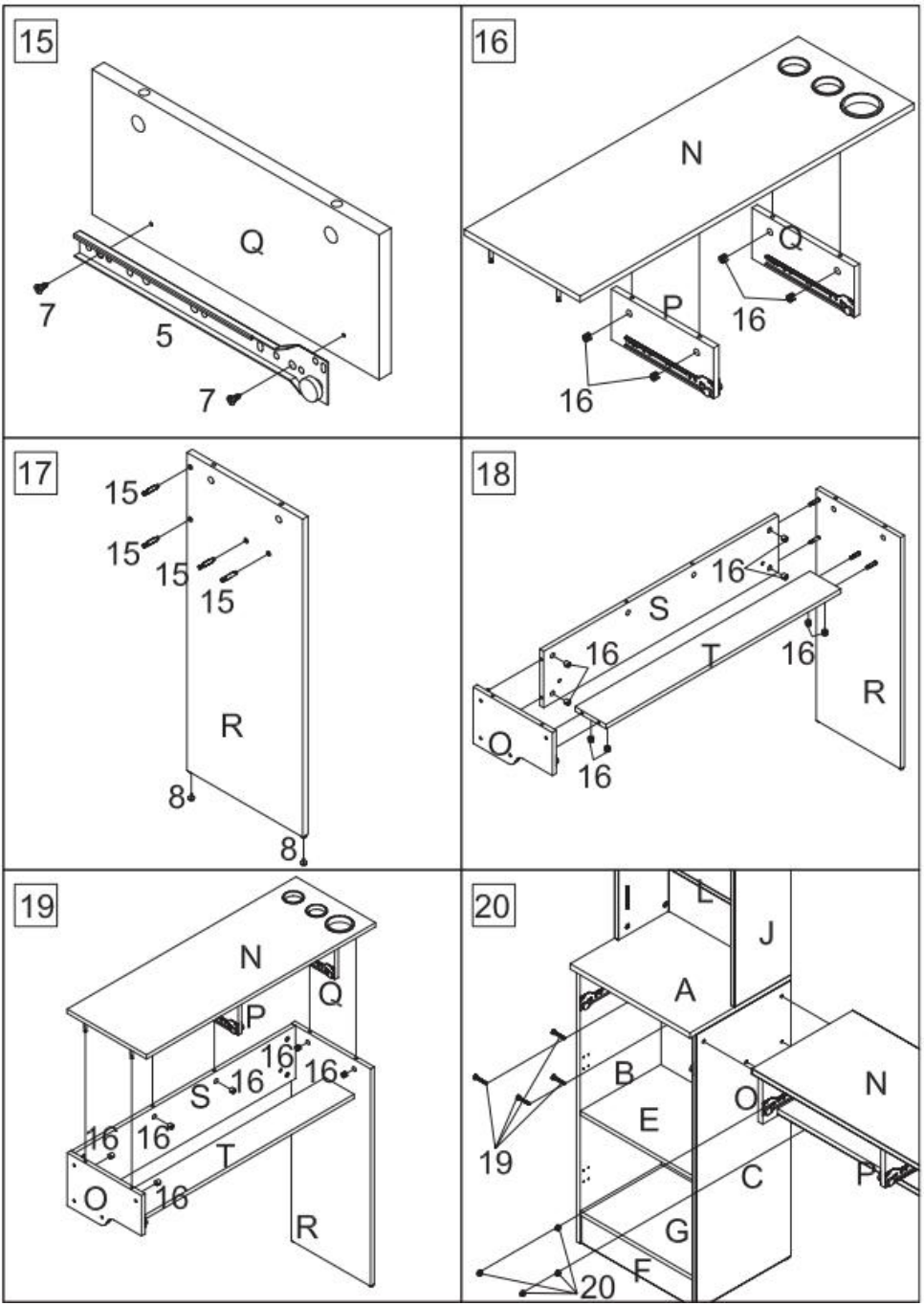
15
Q
7
5
7
16
N
Q
P
16
16
17
15
15
15
15
R
8
8
18
16
S
16
T
16
R
Q
16
19
N
Q
P
16
16
S
16
16
16
T
O
16
R
20
I
L
J
A
B
N
O
E
19
C
P
G
F
20

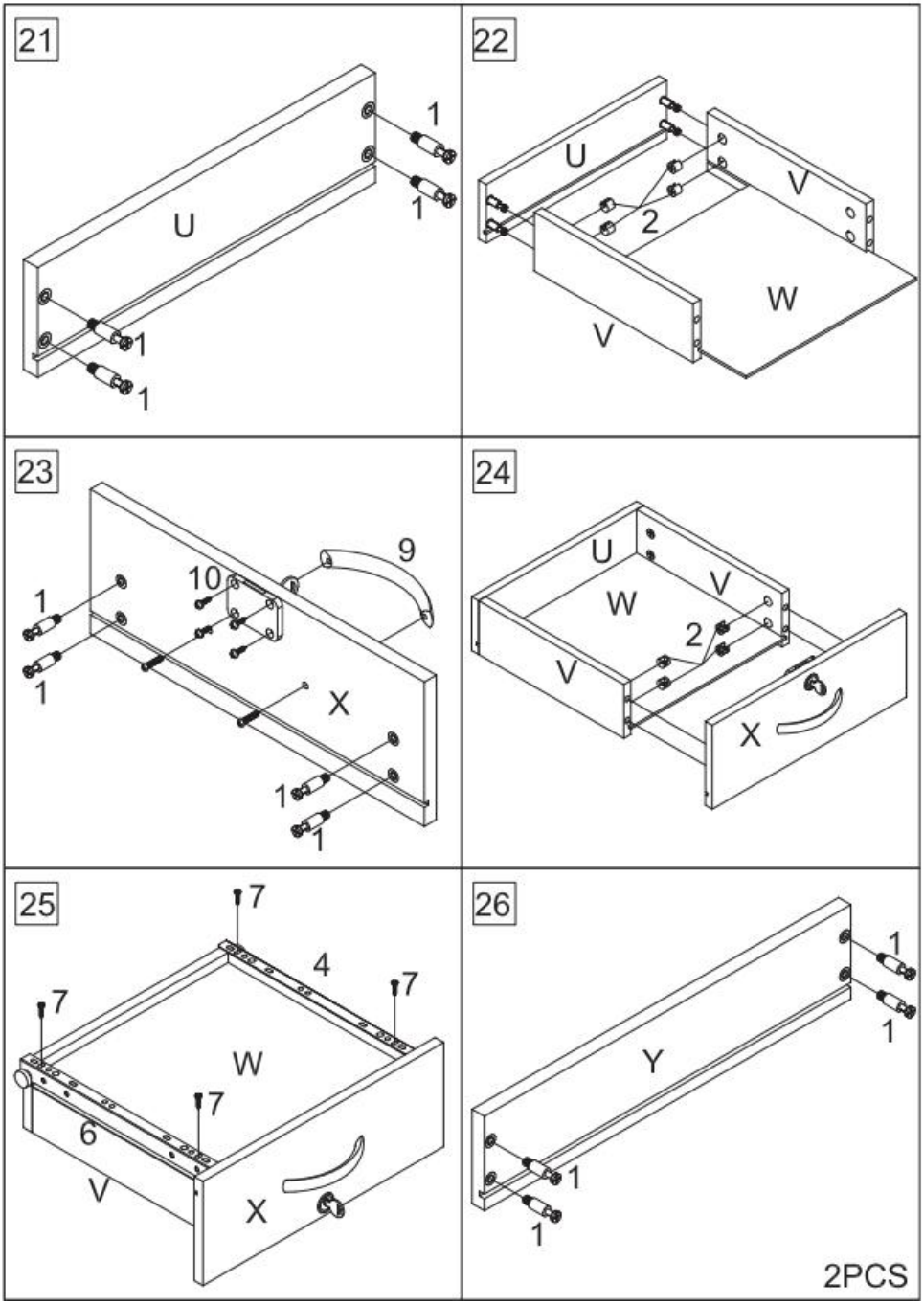
21
U
1
1
1
1
22
U
V
2
W
V
23
9
10
1
1
X
1
1
24
U
V
W
2
V
X
25
7
4
7
7
W
7
6
V
X
26
1
1
Y
1
1
2PCS

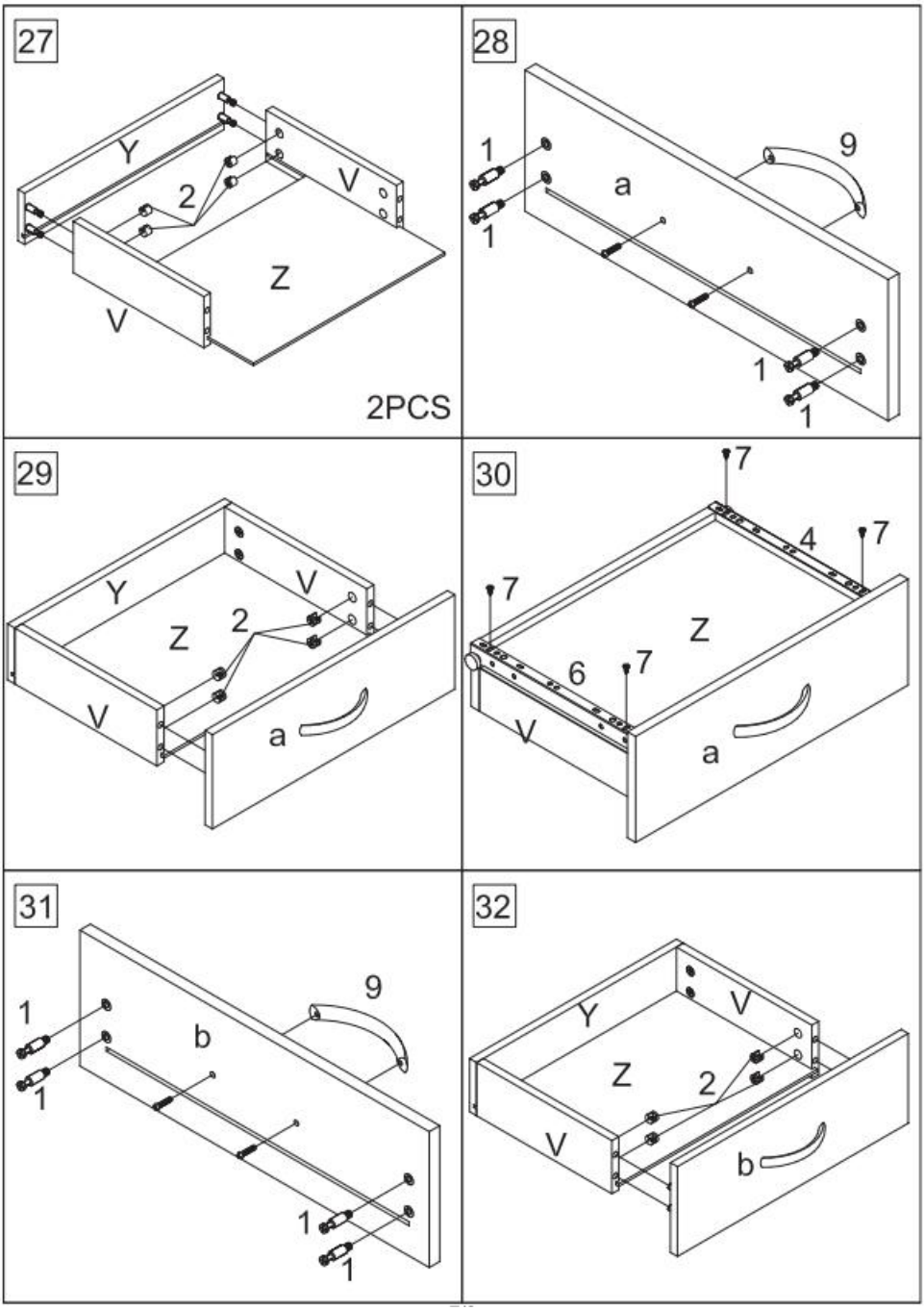
27
Y
2
V
Z
V
2PCS
28
1
9
a
1
1
1
29
Y
V
Z
2
V
a
30
7
4
7
7
Z
6
7
V
a
31
1
9
b
1
1
1
32
Y
V
Z
2
V
b

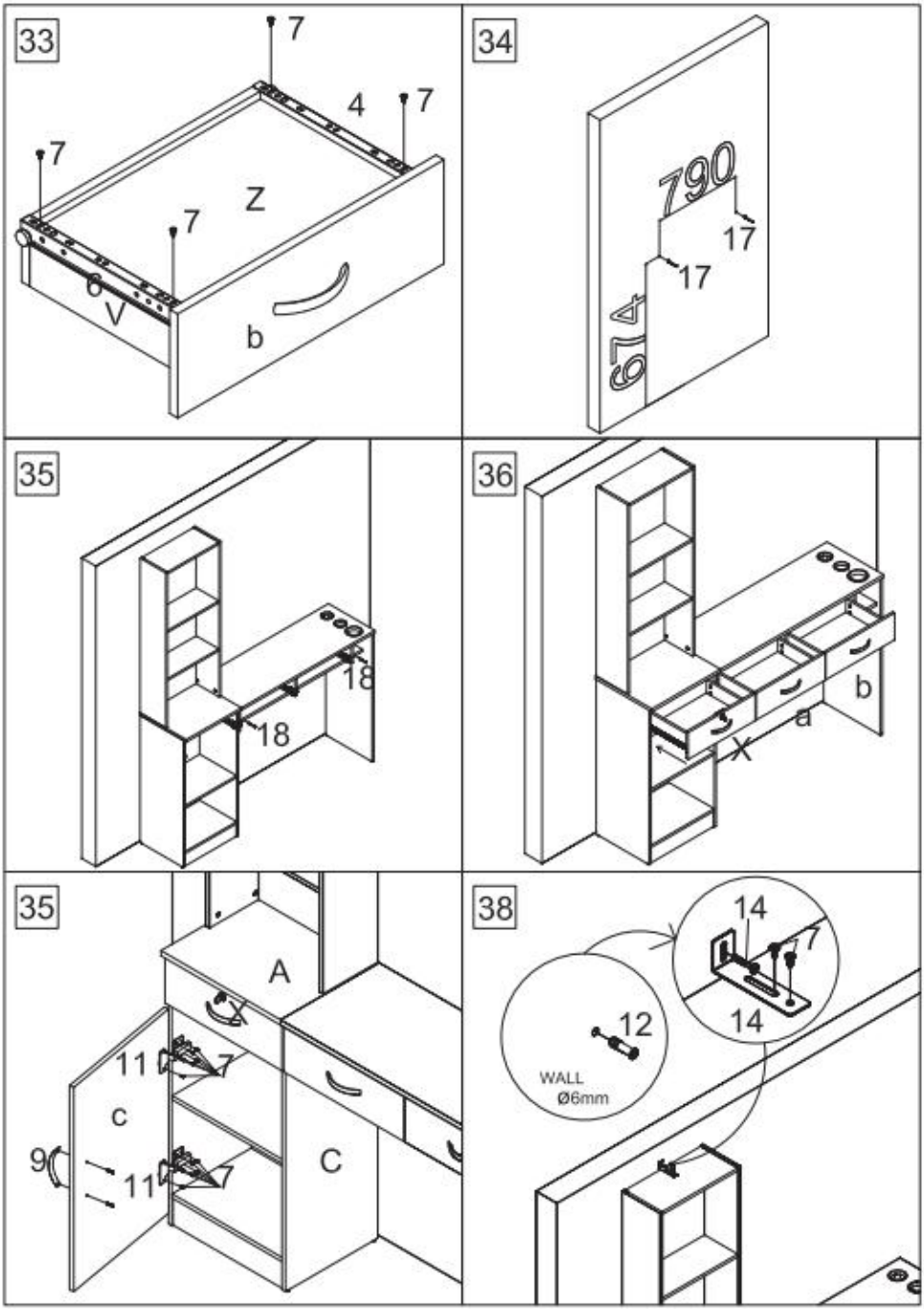
33
7
4
7
7
Z
7
6
V
b
34
790
17
17
614
35
18
18
36
b
a
X
35
A
11
7
c
9
11
7
C
38
14
7
14
12
WALL
Ø6mm

PRODUCT PARAMETER

Dimensioni (mm)	1290*330*1770
Colore	Nero
Tipo	3 cassetti
Struttura	MDF+lega resistente al calore
Maniglia	Lega di alluminio

VEVOR®

TOUGH TOOLS, HALF PRICE

Tecnico Supporto e certificato di garanzia elettronica

www.vevor.com/support

VEVOR®

TOUGH TOOLS, HALF PRICE

Techniczny Certyfikat wsparcia i e-gwarancji www.vevor.com/support

STACJA SALON

INSTRUKCJA obsługi

We continue to be committed to provide you tools with competitive price.
"Save Half", "Half Price" or any other similar expressions used by us only represents an estimate of savings you might benefit from buying certain tools with us compared to the major top brands and does not necessarily mean to cover all categories of tools offered by us. You are kindly reminded to verify carefully when you are placing an order with us if you are actually saving half in comparison with the top major brands.

VEVOR®

TOUGH TOOLS, HALF PRICE

SALON STATION

MODEL: WC1001

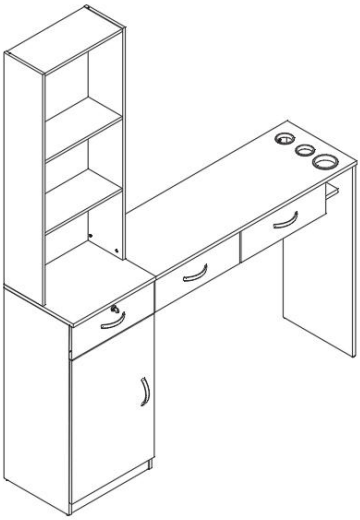

NEED HELP? CONTACT US!

Have product questions? Need technical support? Please feel free to contact us:

Technical Support and E-Warranty Certificate
www.vevor.com/support

This is the original instruction, please read all manual instructions carefully before operating. VEVOR reserves a clear interpretation of our user manual. The appearance of the product shall be subject to the product you received. Please forgive us that we won't inform you again if there are any technology or software updates on our product.

OSTRZEŻENIE:

Przeczytaj uważnie niniejszą instrukcję przed użyciem tego produktu. Niezastosowanie się do tego może spowodować poważne obrażenia.

Środki ostrożności podczas montażu

57. Montaż powinien odbywać się wyłącznie zgodnie z niniejszą instrukcją. Nieprawidłowy montaż może powodować zagrożenia.
58. Podczas montażu należy nosić okulary ochronne i wytrzymałe rękawice robocze zatwierdzone przez ANSI.
59. Utrzymuj miejsce zbiórki w czystości i dobrze oświetlone.
60. Podczas montażu trzymaj osoby postronne z dala od obszaru.
61. Nie należy montować, gdy jest się zmęczonym lub pod wpływem alkoholu, narkotyków lub leków.
62. Możliwości produktu dotyczą wyłącznie produktów prawidłowo i całkowicie zmontowanych.
63. Zmontuj na płaskiej, poziomej, twardej i gładkiej powierzchni, która może bezpiecznie utrzymać stację Salon Station.
64. Dodatkowe informacje dotyczące części wymienionych na kolejnych stronach można znaleźć w schemacie montażu w niniejszej instrukcji. Rozpakuj i oddziel wszystkie części w czystym miejscu pracy.

Stosuj środki ostrożności

43. NIE SIEDŹ ANI NIE STAJ NA TYM PRZEDMIOCIE.
44. Ten produkt nie jest zabawką. Nie pozwalaj dzieciom bawić się tym przedmiotem lub w jego pobliżu.
45. Nie przekraczaj udźwigu.
46. Używaj wyłącznie na płaskiej, równej, twardej i gładkiej powierzchni, która może bezpiecznie utrzymać w pełni obciążony Salon Station .
47. Używaj wyłącznie zgodnie z przeznaczeniem.
48. Sprawdź przed każdym użyciem; nie używać, jeśli części są luźne lub uszkodzone.

ZACHOWAJ TE INSTRUKCJE

PARTS LIST

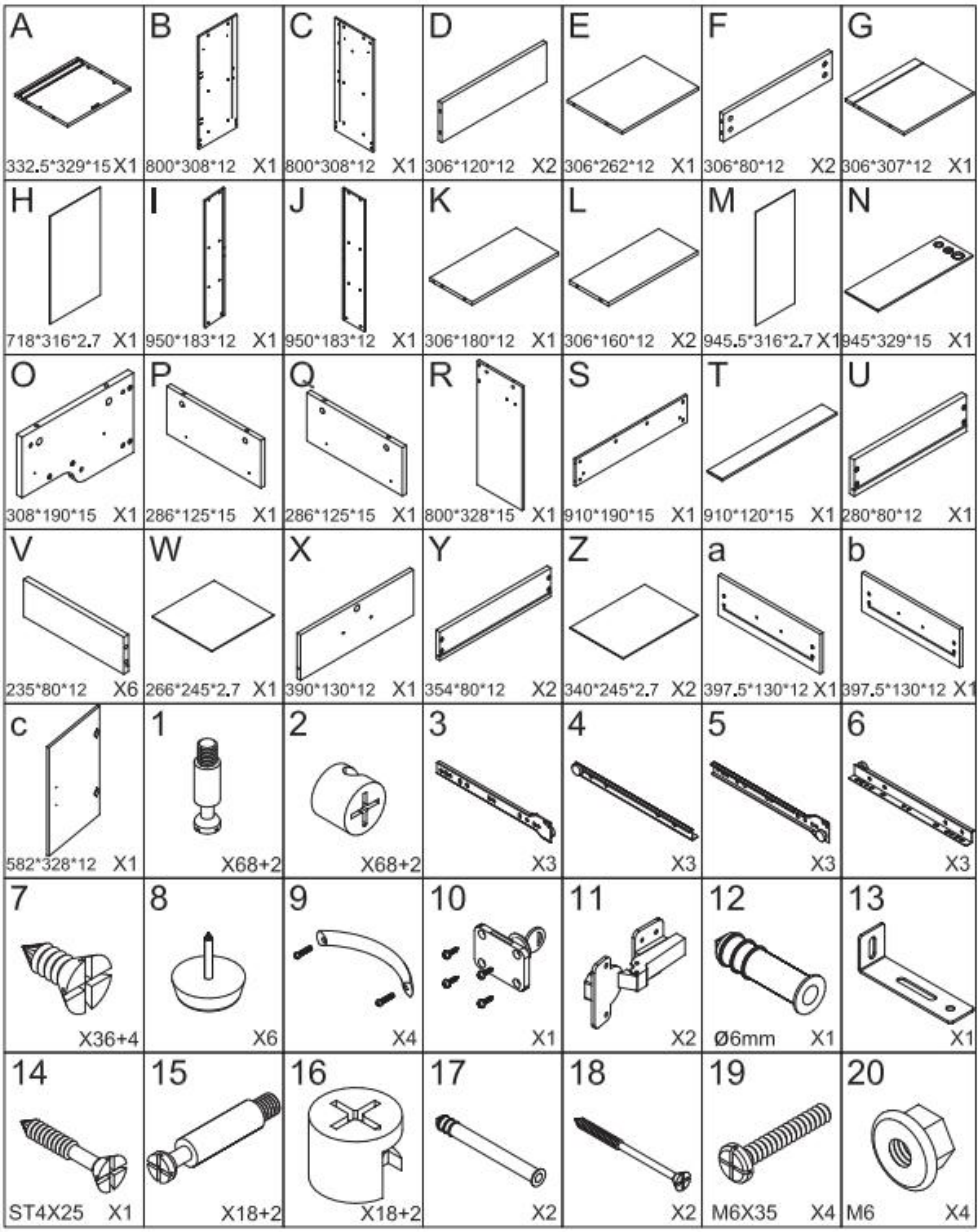

ASSEMBLY INSTRUCTION

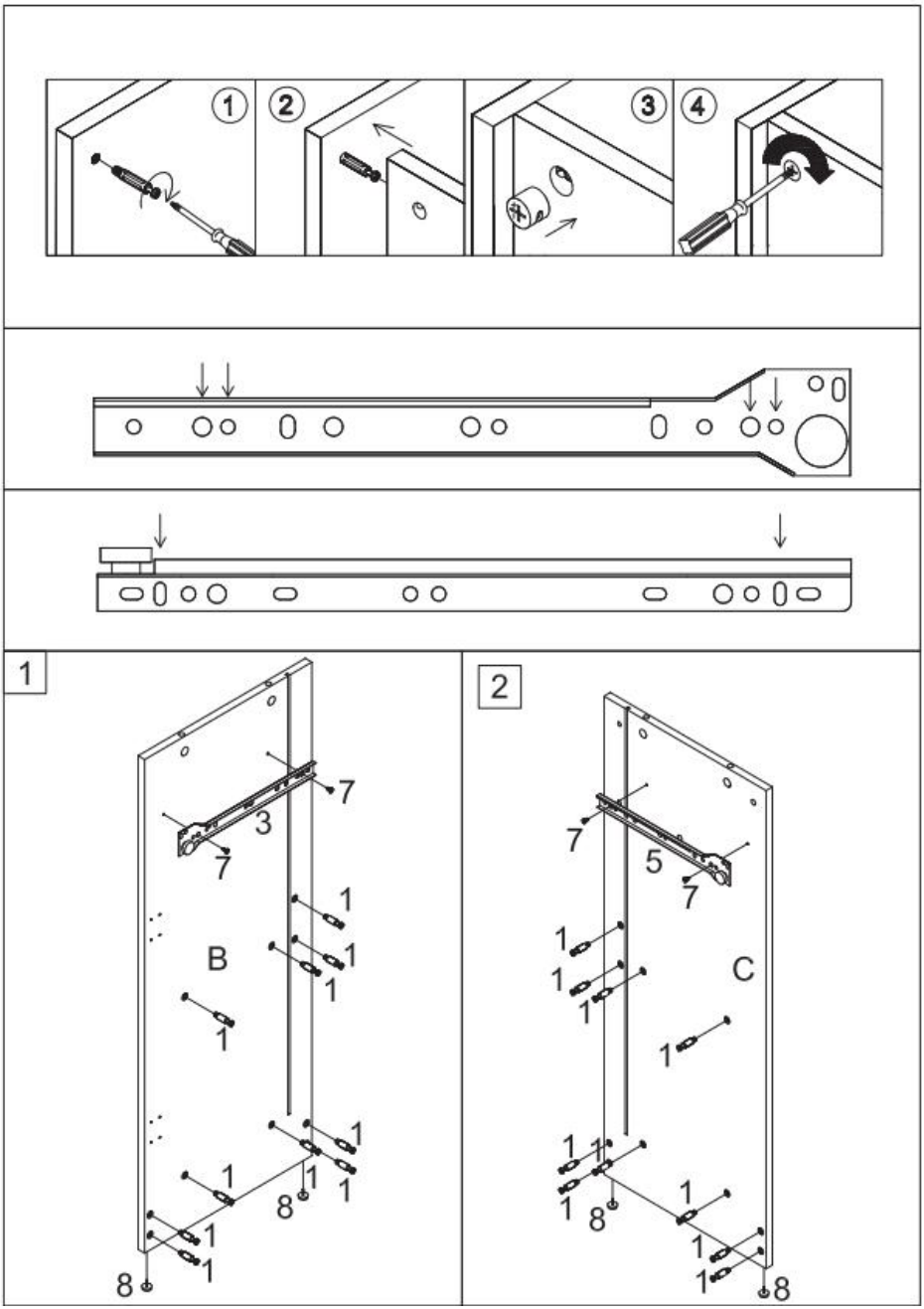

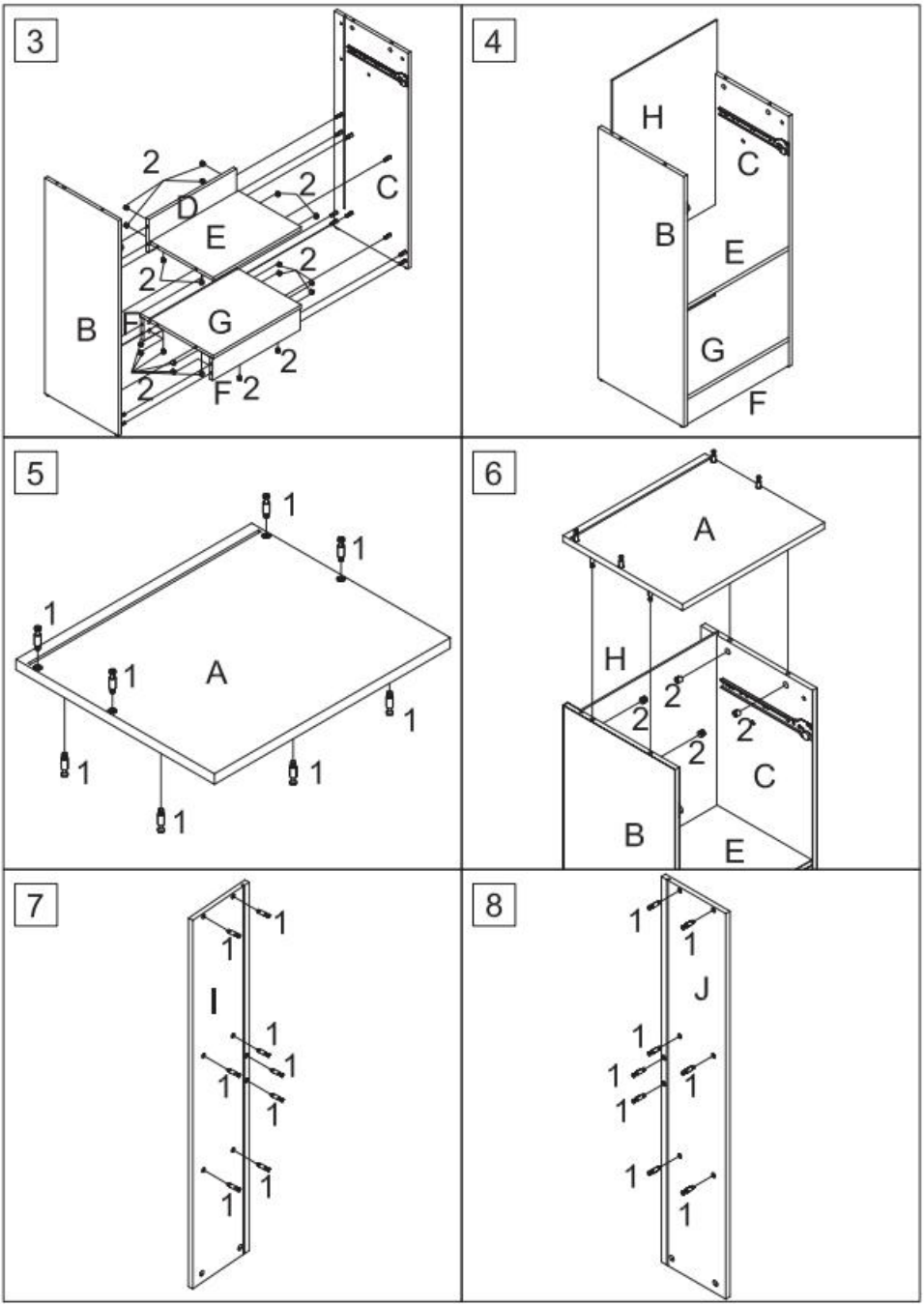
3
2
D
2
C
E
2
2
B
F
G
2
2
F
2
4
H
C
B
E
G
F
5
1
1
1
1
A
1
1
1
1
6
A
H
2
2
2
2
C
B
E
7
1
1
I
1
1
1
1
1
1
8
1
1
J
1
1
1
1
1
1

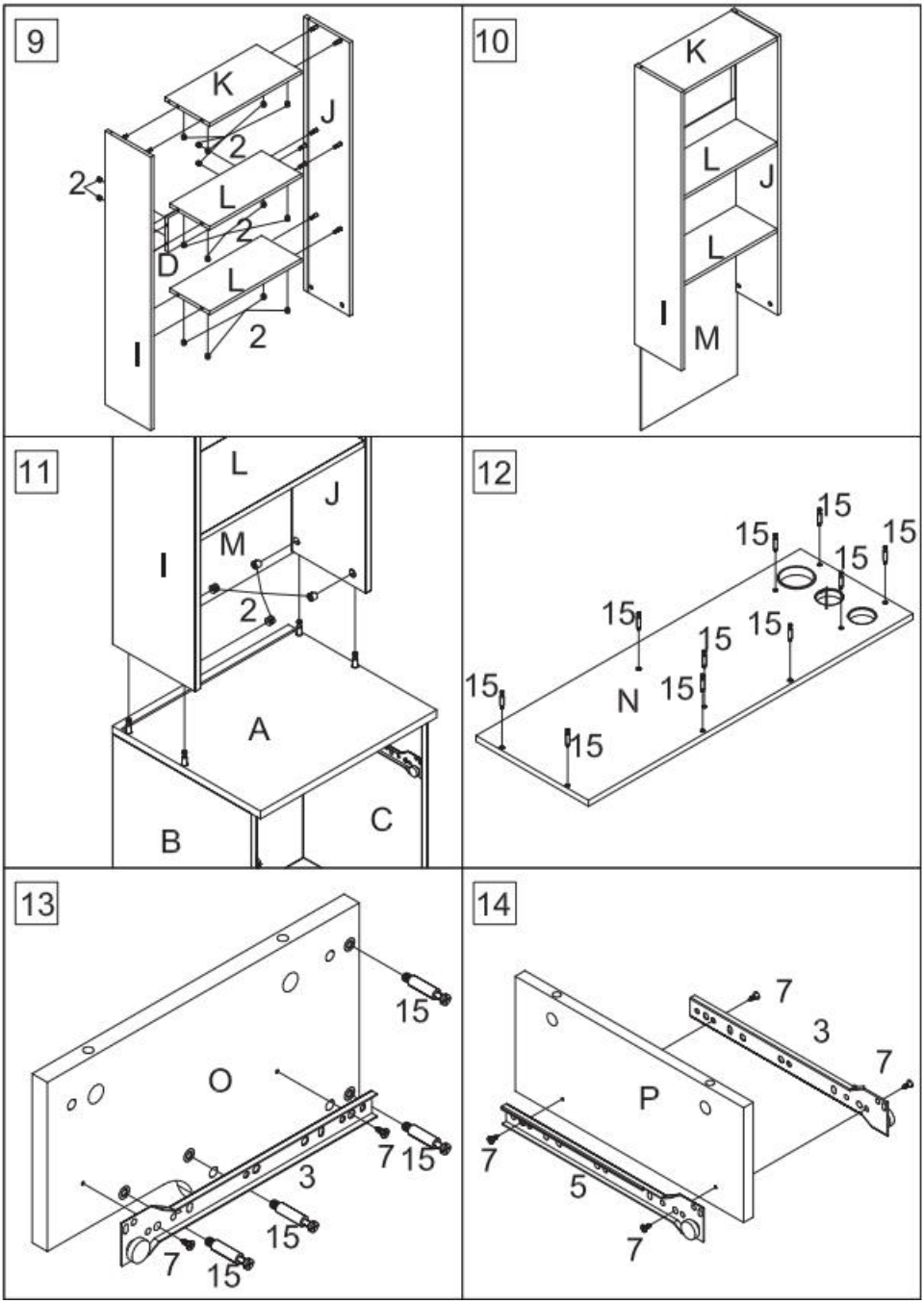
9
K
J
2
2
L
2
D
L
2
I
10
K
L
J
L
I
M
11
L
J
M
I
2
A
B
C
12
15
15
15
15
15
15
15
15
N
15
15
13
15
O
7
15
3
15
7
15
14
7
3
7
P
7
5
7

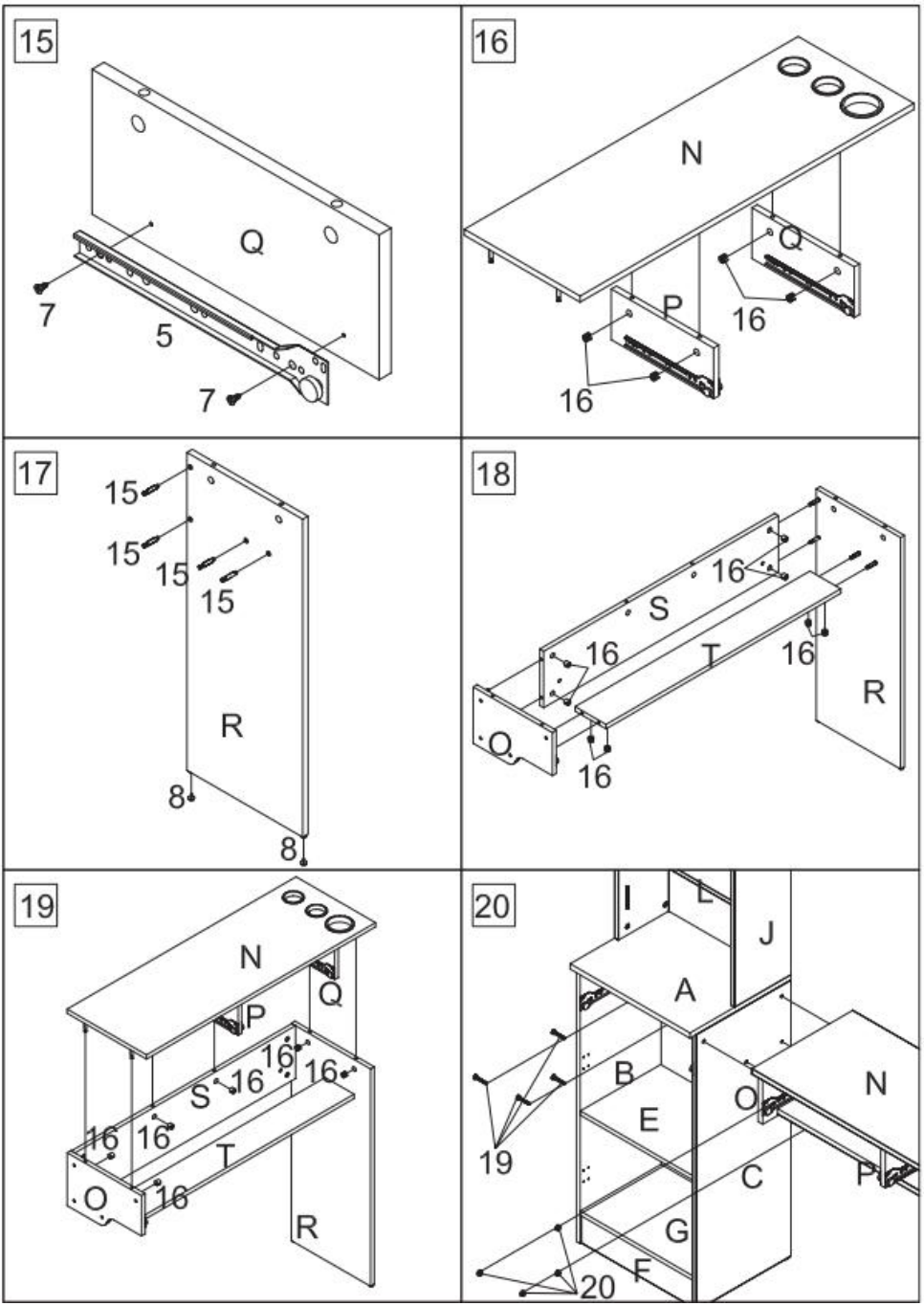
15
Q
7
5
7
16
N
Q
P
16
16
17
15
15
15
15
R
8
8
18
16
S
16
T
16
R
Q
16
19
N
Q
P
16
16
S
16
16
16
T
O
16
R
20
I
L
J
A
B
N
O
E
19
C
P
G
F
20

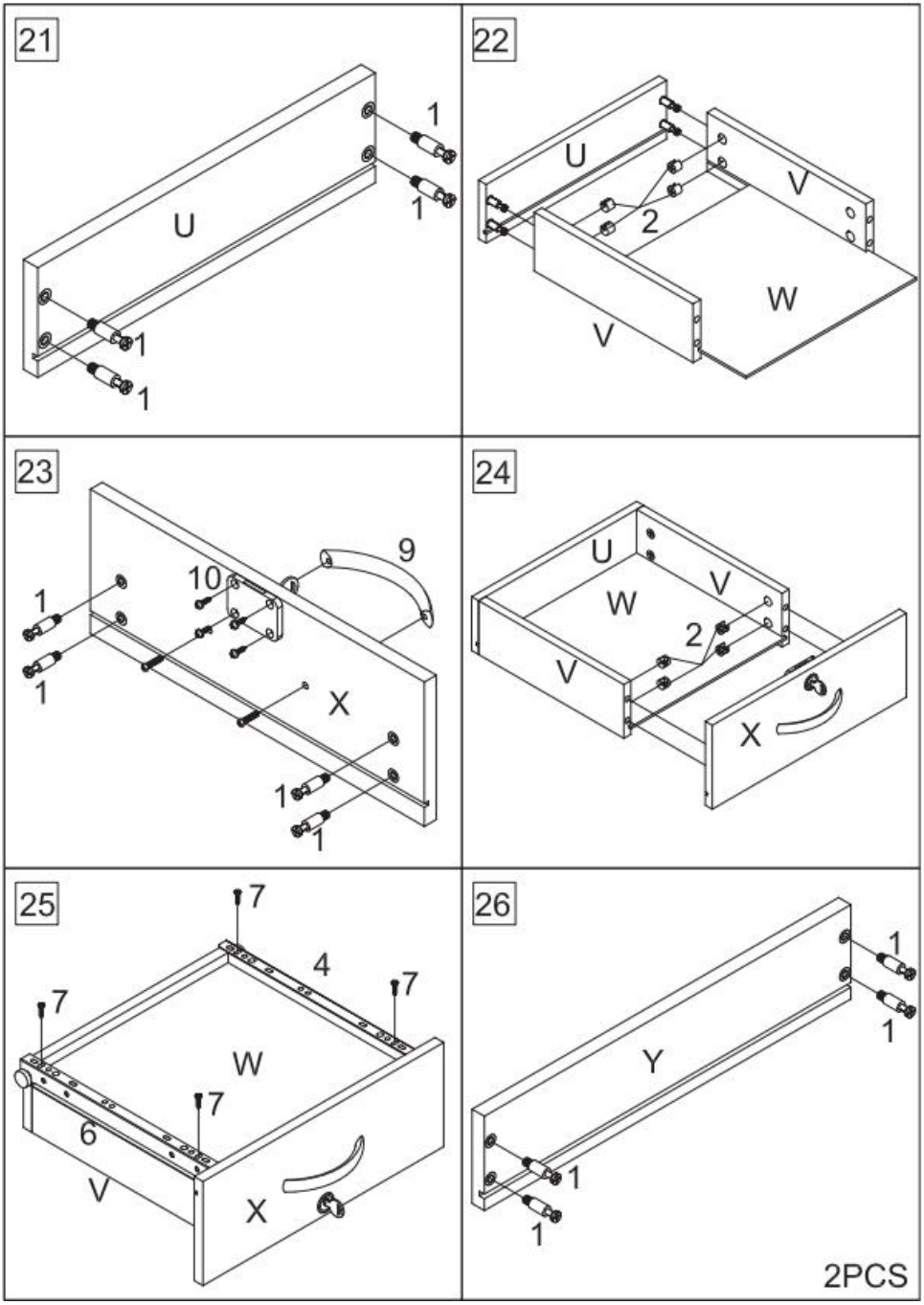
21
U
1
1
1
1
22
U
V
2
W
V
23
9
10
1
1
X
1
1
24
U
V
W
2
V
X
25
7
4
7
7
W
7
6
V
X
26
1
1
Y
1
1
2PCS

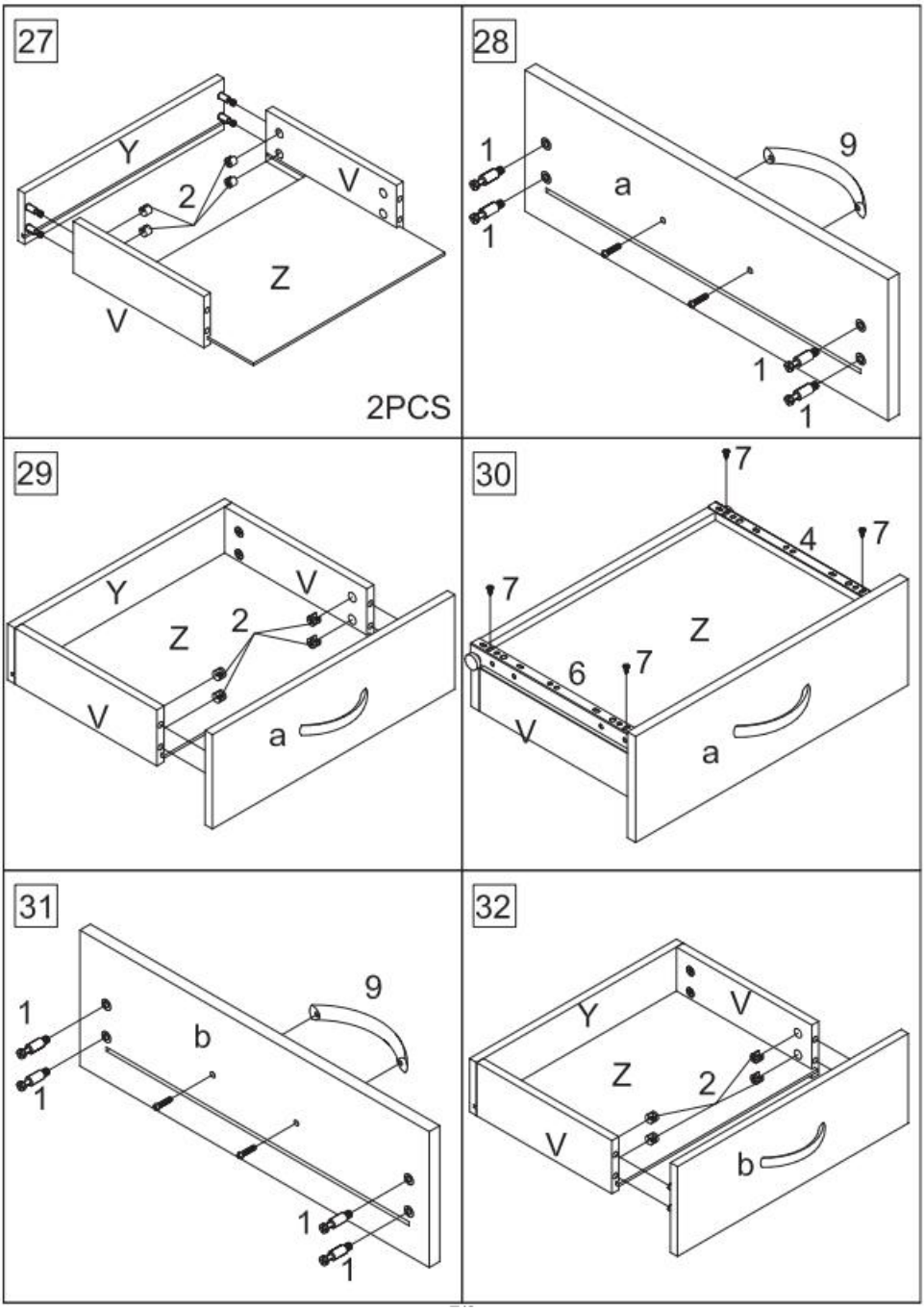
27
Y
2
V
Z
V
2PCS
28
1
9
a
1
1
1
29
Y
V
Z
2
V
a
30
7
4
7
7
Z
6
7
V
a
31
1
9
b
1
1
1
32
Y
V
Z
2
V
b

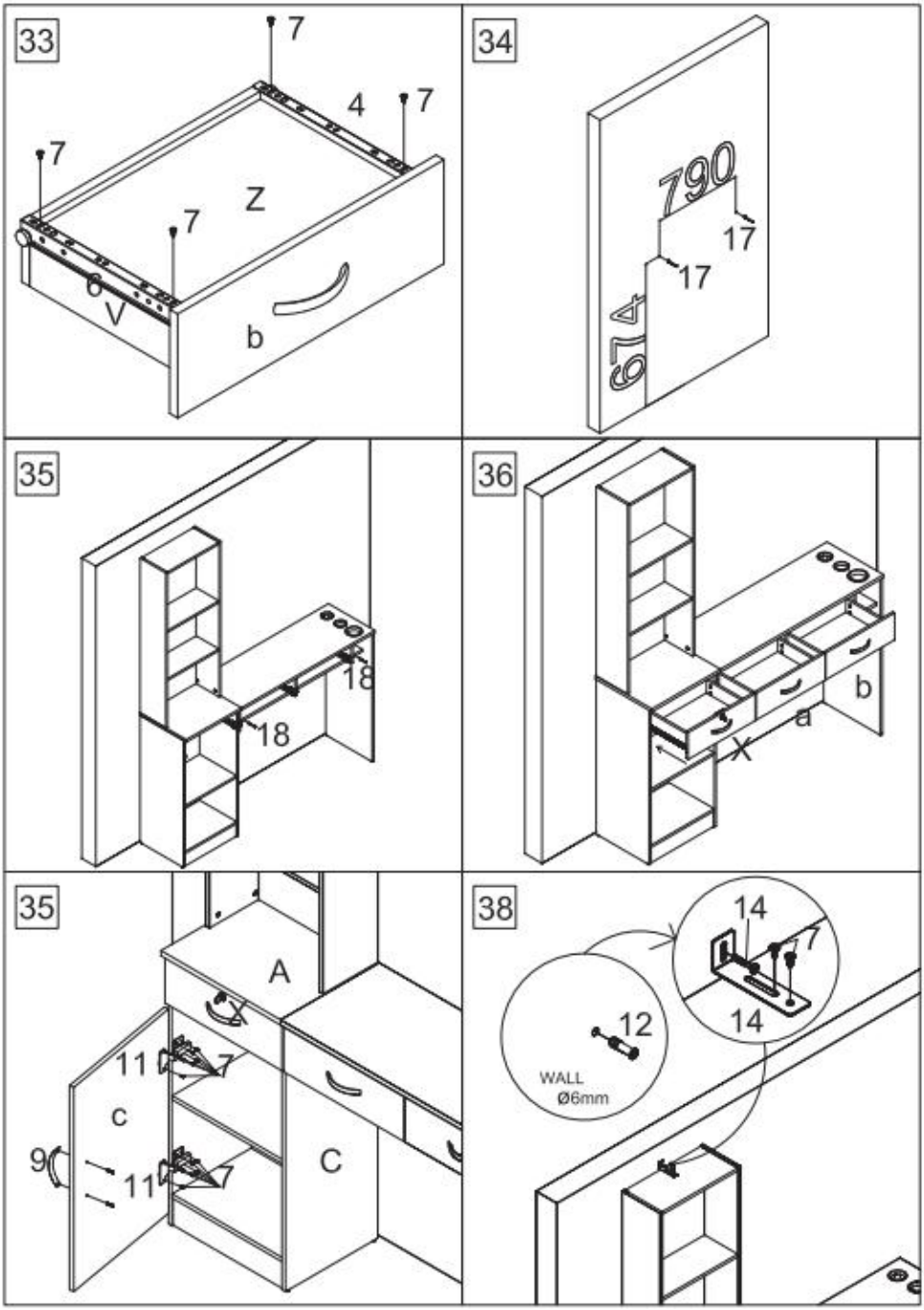
33
7
4
7
7
Z
7
6
V
b
34
790
17
17
614
35
18
18
36
b
a
X
35
A
11
7
c
9
11
7
C
38
14
7
14
12
WALL
Ø6mm

PRODUCT PARAMETER

Rozmiar (mm)	1290*330*1770
Kolor	Czarny
Typ	3 szuflady
Tekstura	MDF + stop żaroodporny
Uchwyt	Stop aluminium

VEVOR®

TOUGH TOOLS, HALF PRICE

Techniczny Certyfikat wsparcia i e-gwarancji

www.vevor.com/support