VEVOR®

TOUGH TOOLS, HALF PRICE

Technical Support and E-Warranty Certificate

www.vevor.com/support

MANUAL RING EXPANDER

USER MANUAL

We continue to be committed to provide you tools with competitive price.
"Save Half", "Half Price" or any other similar expressions used by us only represents an estimate of savings you might benefit from buying certain tools with us compared to the major top brands and does not necessarily mean to cover all categories of tools offered by us. You are kindly reminded to verify carefully when you are placing an order with us if you are actually saving half in comparison with the top major brands.

VEVOR®
TOUGH TOOLS, HALF PRICE

MANUAL RING EXPANDER

MODEL: KD-101

(The picture is for reference only, please refer to the actual object)

NEED HELP? CONTACT US!

Have product questions? Need technical support? Please feel free to contact us:

Technical Support and E-Warranty Certificate
www.vevor.com/support

This is the original instruction, please read all manual instructions carefully before operating. VEVOR reserves a clear interpretation of our user manual. The appearance of the product shall be subject to the product you received. Please forgive us that we won't inform you again if there are any technology or software updates on our product.

SAFETY INSTRUCTION AND PRECAUTIONS

WARNING:

Read this material before using this product. Failure to do so can result in serious injury.

1. This product is not a toy. Do not allow children to play with this item.
2. Use as intended only.
3. Please fasten the machine to the table before use.

NAME OF PARTS

1. blades 2.Expansion bar 3.Base 4.Fixed hole 5.Hand lever

HOLE CLASS

Europe, America, Japan and Hong Kong 4 sizes

OPERATION AS BELOW

1.Operation is simple, pressing the expansion bar to expand.

2. The scale is clear and legible.

3.base is fixed with three holes, and it is convenient to expand the force after fixing the ring.

	Items	Description
1	Name	Manual ring expander
2	Model	KD-101
3	Parameter	Finger hole adjustable range CU：41-71，US：1-14，No.：1-31，HK：8-32

VEVOR®

TOUGH TOOLS, HALF PRICE

Technical Support and E-Warranty Certificate

www.vevor.com/support

VEVOR®

TOUGH TOOLS, HALF PRICE

Techniczny Wsparcie i certyfikat e-gwarancji

www.vevor.com/support

RĘCZNY EKSPANDER PIERŚCIENIOWY

INSTRUKCJA OBSŁUGI

We continue to be committed to provide you tools with competitive price.
"Save Half", "Half Price" or any other similar expressions used by us only represents an estimate of savings you might benefit from buying certain tools with us compared to the major top brands and does not necessarily mean to cover all categories of tools offered by us. You are kindly reminded to verify carefully when you are placing an order with us if you are actually saving half in comparison with the top major brands.

VEVOR®
TOUGH TOOLS, HALF PRICE

MANUAL RING EXPANDER

MODEL: KD-101

(Zdjęcie ma charakter poglądowy, proszę odnieść się do rzeczywistego obiektu)

NEED HELP? CONTACT US!

Have product questions? Need technical support? Please feel free to contact us:

Technical Support and E-Warranty Certificate
www.vevor.com/support

This is the original instruction, please read all manual instructions carefully before operating. VEVOR reserves a clear interpretation of our user manual. The appearance of the product shall be subject to the product you received. Please forgive us that we won't inform you again if there are any technology or software updates on our product.

SAFETY INSTRUCTION AND PRECAUTIONS

OSTRZEŻENIE:

Przeczytaj ten materiał przed użyciem tego produktu. Nieprzestrzeganie tego może spowodować poważne obrażenia.

1. Ten produkt nie jest zabawką. Nie pozwalaj dzieciom bawić się tym przedmiotem.
2. Używać wyłącznie zgodnie z przeznaczeniem.
3. Przed użyciem należy przymocować maszynę do stołu.

NAME OF PARTS

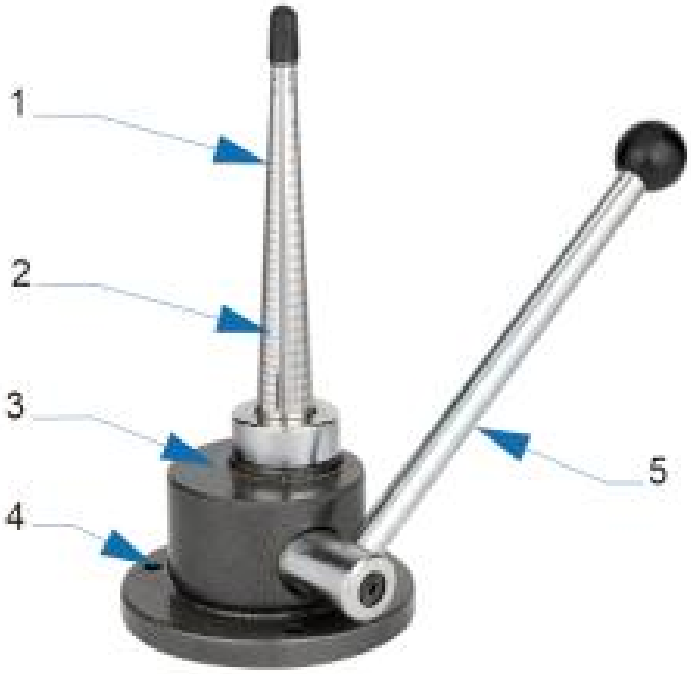

1. ostrza 2. drążek rozprężny 3. podstawa 4. otwór stały 5. dźwignia ręczna

HOLE CLASS

Europa, Ameryka, Japonia i Hongkong 4 rozmiary

OPERATION AS BELOW

1. Obsługa jest prosta, wystarczy nacisnąć pasek rozprężny, aby rozszerzyć.

2. Skala jest przejrzysta i czytelna .

3. Podstawa jest zamocowana za pomocą trzech otworów, co ułatwia zwiększenie siły po zamocowaniu pierścienia .

	Rzeczy	Opis
1	Nazwa	Ręczny ekspander pierścieniowy
2	Model	KD-101
3	Parametr	Zakres regulacji otworu na palec CU : 41-71 , USA : 1-14 , nr : 1-31 , HK : 8-32

VEVOR®

TOUGH TOOLS, HALF PRICE

Wsparcie techniczne i certyfikat e-gwarancji

www.vevor.com/support

VEVOR®

TOUGH TOOLS, HALF PRICE

Technisch Support und E-Garantie-Zertifikat

www.vevor.com/support

MANUELLER RINGEXPANDER

BENUTZERHANDBUCH

We continue to be committed to provide you tools with competitive price.
"Save Half", "Half Price" or any other similar expressions used by us only represents an estimate of savings you might benefit from buying certain tools with us compared to the major top brands and does not necessarily mean to cover all categories of tools offered by us. You are kindly reminded to verify carefully when you are placing an order with us if you are actually saving half in comparison with the top major brands.

VEVOR®
TOUGH TOOLS, HALF PRICE

MANUAL RING EXPANDER

MODELL: KD-101

(Das Bild dient nur als Referenz, bitte beziehen Sie sich auf das tatsächliche Objekt)

NEED HELP? CONTACT US!

Have product questions? Need technical support? Please feel free to contact us:

Technical Support and E-Warranty Certificate
www.vevor.com/support

This is the original instruction, please read all manual instructions carefully before operating. VEVOR reserves a clear interpretation of our user manual. The appearance of the product shall be subject to the product you received. Please forgive us that we won't inform you again if there are any technology or software updates on our product.

SAFETY INSTRUCTION AND PRECAUTIONS

WARNUNG:

Lesen Sie dieses Material, bevor Sie dieses Produkt verwenden. Andernfalls kann es zu schweren Verletzungen kommen.

1. Dieses Produkt ist kein Spielzeug. Erlauben Sie Kindern nicht, mit diesem Artikel zu spielen.
2. Nur bestimmungsgemäß verwenden.
3. Bitte befestigen Sie die Maschine vor dem Gebrauch am Tisch.

NAME OF PARTS

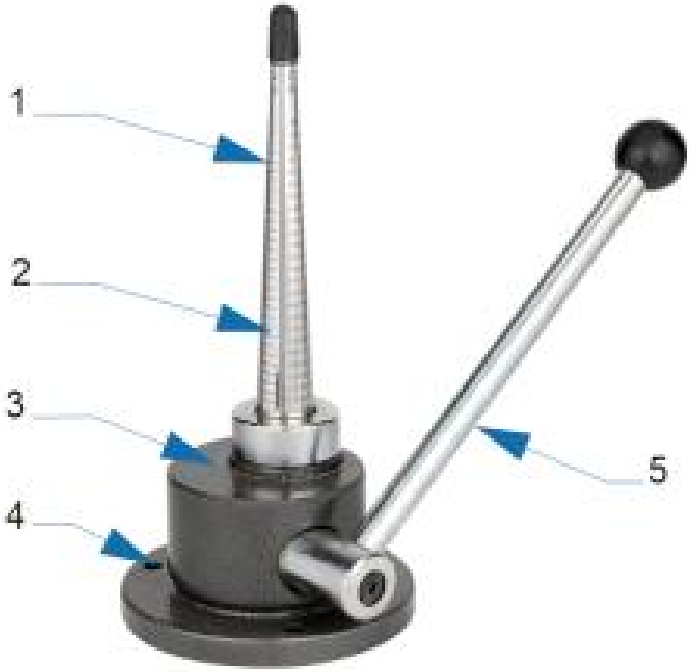

1. Klingen 2. Expansionsstange 3. Basis 4. Festes Loch 5. Handhebel

HOLE CLASS

Europa, Amerika, Japan und Hong Kong 4 Größen

OPERATION AS BELOW

1. Die Bedienung ist einfach: Zum Erweitern drücken Sie die Erweiterungsleiste.

2. Die Skala ist klar und lesbar.

3. Die Basis ist mit drei Löchern befestigt, und es ist praktisch, die Kraft nach dem Befestigen des Rings auszudehnen .

	Artikel	Beschreibung
1	Name	Manueller Ringexpander
2	Modell	KD-101
3	Parameter	Verstellbereich des Grifflochs CU : 41-71 , US : 1-14 , Nr .: 1-31 , HK : 8-32

VEVOR®

TOUGH TOOLS, HALF PRICE

Technischer Support und E-Garantie-Zertifikat

www.vevor.com/support

VEVOR®

TOUGH TOOLS, HALF PRICE

Technique Certificat d'assistance et de garantie électronique

www.vevor.com/support

EXTENSEUR D'ANNEAU MANUEL

MANUEL D'UTILISATION

We continue to be committed to provide you tools with competitive price.
"Save Half", "Half Price" or any other similar expressions used by us only represents an estimate of savings you might benefit from buying certain tools with us compared to the major top brands and does not necessarily mean to cover all categories of tools offered by us. You are kindly reminded to verify carefully when you are placing an order with us if you are actually saving half in comparison with the top major brands.

VEVOR®
TOUGH TOOLS, HALF PRICE

MANUAL RING EXPANDER

MODÈLE: KD-101

(L'image est à titre de référence uniquement, veuillez vous référer à l'objet réel)

NEED HELP? CONTACT US!

Have product questions? Need technical support? Please feel free to contact us:

Technical Support and E-Warranty Certificate
www.vevor.com/support

This is the original instruction, please read all manual instructions carefully before operating. VEVOR reserves a clear interpretation of our user manual. The appearance of the product shall be subject to the product you received. Please forgive us that we won't inform you again if there are any technology or software updates on our product.

SAFETY INSTRUCTION AND PRECAUTIONS

AVERTISSEMENT:

Lisez ce document avant d'utiliser ce produit. Le non-respect de ces instructions peut entraîner des blessures graves.

1. Ce produit n'est pas un jouet. Ne laissez pas les enfants jouer avec cet article.
2. Utiliser uniquement comme prévu.
3. Veuillez fixer la machine à la table avant utilisation.

NAME OF PARTS

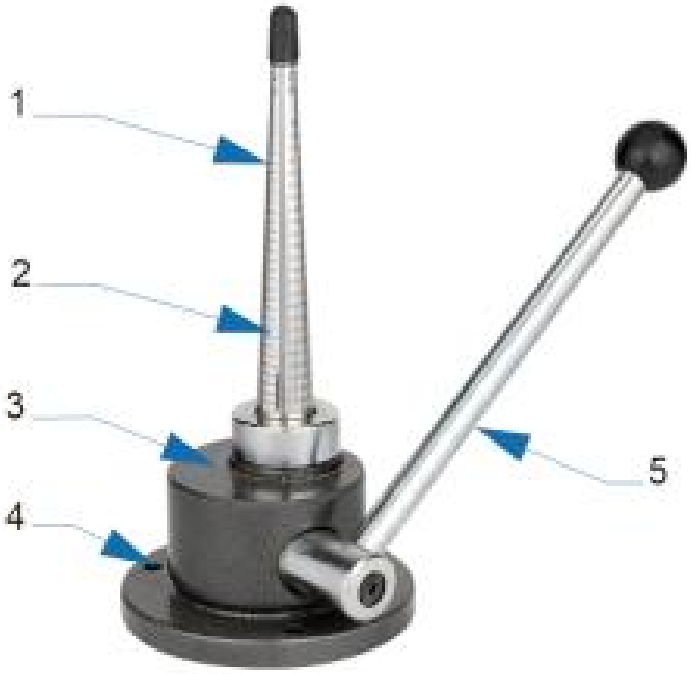

1. lames 2. barre d'extension 3. base 4. trou fixe 5. levier à main

HOLE CLASS

Europe, Amérique, Japon et Hong Kong 4 tailles

OPERATION AS BELOW

1. L'opération est simple, appuyez sur la barre d'extension pour agrandir.

2. L’échelle est claire et lisible .

3. La base est fixée avec trois trous et il est pratique d'étendre la force après avoir fixé l'anneau .

	Articles	Description
1	Nom	Extenseur d'anneau manuel
2	Modèle	KD-101
3	Paramètre	Plage de réglage du trou pour les doigts CU : 41-71 , États-Unis : 1-14 , n° : 1-31 , HK : 8-32

VEVOR®

TOUGH TOOLS, HALF PRICE

Assistance technique et certificat de garantie électronique

www.vevor.com/support

VEVOR®

TOUGH TOOLS, HALF PRICE

Technisch Ondersteuning en E-garantiecertificaat

www.vevor.com/support

HANDMATIGE RINGEXPANDER

GEBRUIKERSHANDLEIDING

We continue to be committed to provide you tools with competitive price.
"Save Half", "Half Price" or any other similar expressions used by us only represents an estimate of savings you might benefit from buying certain tools with us compared to the major top brands and does not necessarily mean to cover all categories of tools offered by us. You are kindly reminded to verify carefully when you are placing an order with us if you are actually saving half in comparison with the top major brands.

VEVOR®
TOUGH TOOLS, HALF PRICE

MANUAL RING EXPANDER

MODEL: KD-101

(De afbeelding is alleen ter referentie, kijk naar het daadwerkelijke object)

NEED HELP? CONTACT US!

Have product questions? Need technical support? Please feel free to contact us:

Technical Support and E-Warranty Certificate
www.vevor.com/support

This is the original instruction, please read all manual instructions carefully before operating. VEVOR reserves a clear interpretation of our user manual. The appearance of the product shall be subject to the product you received. Please forgive us that we won't inform you again if there are any technology or software updates on our product.

SAFETY INSTRUCTION AND PRECAUTIONS

WAARSCHUWING:

Lees dit materiaal voordat u dit product gebruikt. Als u dit niet doet, kan dit leiden tot ernstig letsel.

1. Dit product is geen speelgoed. Laat kinderen niet met dit artikel spelen.
2. Gebruik het product alleen zoals bedoeld.
3. Bevestig het apparaat vóór gebruik aan de tafel.

NAME OF PARTS

1. messen 2. expansiebalk 3. basis 4. vast gat 5. handhendel

HOLE CLASS

Europa, Amerika, Japan en Hong Kong 4 maten

OPERATION AS BELOW

1. De bediening is eenvoudig: druk op de uitbreidingsbalk om uit te breiden.

2. De schaal is duidelijk en leesbaar.

3. De basis is bevestigd met drie gaten en het is handig om de kracht uit te breiden nadat de ring is bevestigd .

	Artikelen	Beschrijving
1	Naam	Handmatige ringexpander
2	Model	KD-101
3	Parameter	Vingergat instelbaar bereik CU : 41-71 , VS : 1-14 , nr .: 1-31 , HK : 8-32

VEVOR®

TOUGH TOOLS, HALF PRICE

Technische ondersteuning en e-garantiecertificaat

www.vevor.com/support

VEVOR®

TOUGH TOOLS, HALF PRICE

Teknisk Support och e-garanticertifikat

www.vevor.com/support

MANUELL RINGEXPANDERARE

ANVÄNDARMANUAL

We continue to be committed to provide you tools with competitive price.
"Save Half", "Half Price" or any other similar expressions used by us only represents an estimate of savings you might benefit from buying certain tools with us compared to the major top brands and does not necessarily mean to cover all categories of tools offered by us. You are kindly reminded to verify carefully when you are placing an order with us if you are actually saving half in comparison with the top major brands.

VEVOR®
TOUGH TOOLS, HALF PRICE

MANUAL RING EXPANDER

MODELL: KD-101

(Bilden är endast för referens, se det faktiska objektet)

NEED HELP? CONTACT US!

Have product questions? Need technical support? Please feel free to contact us:

Technical Support and E-Warranty Certificate
www.vevor.com/support

This is the original instruction, please read all manual instructions carefully before operating. VEVOR reserves a clear interpretation of our user manual. The appearance of the product shall be subject to the product you received. Please forgive us that we won't inform you again if there are any technology or software updates on our product.

SAFETY INSTRUCTION AND PRECAUTIONS

VARNING:

Läs detta material innan du använder denna produkt. Underlåtenhet att göra det kan resultera i allvarliga skador.

1. Denna produkt är inte en leksak. Tillåt inte barn att leka med detta föremål.
2. Använd endast på avsett sätt.
3. Fäst maskinen vid bordet före användning.

NAME OF PARTS

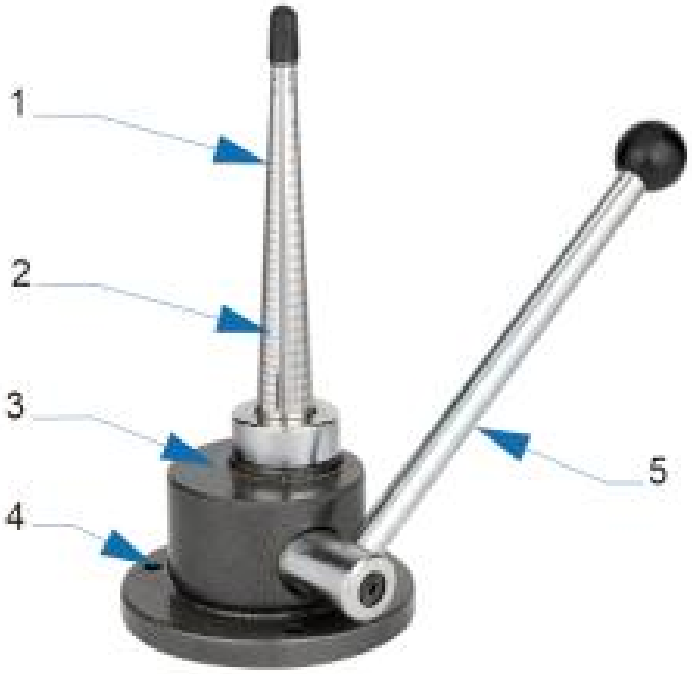

1. blad 2. Expansionsstång 3. Bas 4. Fast hål 5. Handspak

HOLE CLASS

Europa, Amerika, Japan och Hong Kong 4 storlekar

OPERATION AS BELOW

1. Operationen är enkel, tryck på expansionslisten för att expandera.

2 . Skalan är tydlig och läsbar.

3 .basen är fixerad med tre hål, och det är bekvämt att expandera kraften efter fixering av ringen .

	Föremål	Beskrivning
1	Namn	Manuell ringexpanderare
2	Modell	KD-101
3	Parameter	Fingerhål justerbart område CU : 41-71 , US : 1-14 , nr. : 1-31 , HK : 8-32

VEVOR®

TOUGH TOOLS, HALF PRICE

Teknisk support och e-garanticertifikat

www.vevor.com/support

VEVOR®

TOUGH TOOLS, HALF PRICE

Técnico Certificado de soporte y garantía electrónica

www.vevor.com/support

EXPANSOR DE ANILLO MANUAL

MANUAL DEL USUARIO

We continue to be committed to provide you tools with competitive price.
"Save Half", "Half Price" or any other similar expressions used by us only represents an estimate of savings you might benefit from buying certain tools with us compared to the major top brands and does not necessarily mean to cover all categories of tools offered by us. You are kindly reminded to verify carefully when you are placing an order with us if you are actually saving half in comparison with the top major brands.

VEVOR®
TOUGH TOOLS, HALF PRICE

MANUAL RING EXPANDER

MODELO: KD-101

(La imagen es solo de referencia, consulte el objeto real)

NEED HELP? CONTACT US!

Have product questions? Need technical support? Please feel free to contact us:

Technical Support and E-Warranty Certificate
www.vevor.com/support

This is the original instruction, please read all manual instructions carefully before operating. VEVOR reserves a clear interpretation of our user manual. The appearance of the product shall be subject to the product you received. Please forgive us that we won't inform you again if there are any technology or software updates on our product.

SAFETY INSTRUCTION AND PRECAUTIONS

ADVERTENCIA:

Lea este material antes de utilizar este producto. No hacerlo puede provocar lesiones graves.

1. Este producto no es un juguete. No permita que los niños jueguen con él.
2. Utilícelo únicamente según lo previsto.
3. Fije la máquina a la mesa antes de usarla.

NAME OF PARTS

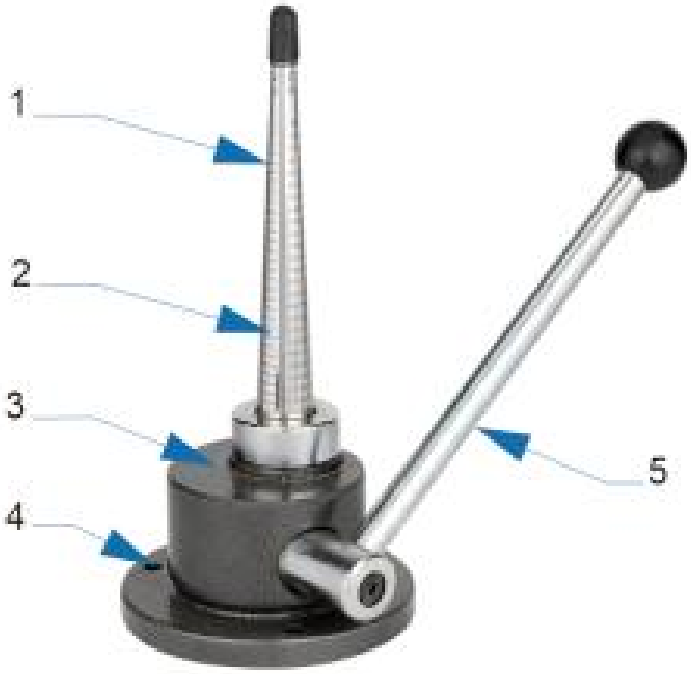

1. Cuchillas 2. Barra de expansión 3. Base 4. Orificio fijo 5. Palanca manual

HOLE CLASS

Europa, América, Japón y Hong Kong 4 tamaños

OPERATION AS BELOW

1. La operación es sencilla, presione la barra de expansión para expandir.

2. La escala es clara y legible .

3. La base se fija con tres orificios y es conveniente expandir la fuerza después de fijar el anillo .

	Elementos	Descripción
1	Nombre	Expansor de anillo manual
2	Modelo	KD-101
3	Parámetro	Rango ajustable del orificio para el dedo CU : 41-71 , EE. UU .: 1-14 , No .: 1-31 , HK : 8-32

VEVOR®

TOUGH TOOLS, HALF PRICE

Soporte técnico y certificado de garantía electrónica

www.vevor.com/support

VEVOR®

TOUGH TOOLS, HALF PRICE

Tecnico Supporto e certificato di garanzia elettronica

www.vevor.com/support

ESPANSORE AD ANELLO MANUALE

MANUALE D'USO

We continue to be committed to provide you tools with competitive price.
"Save Half", "Half Price" or any other similar expressions used by us only represents an estimate of savings you might benefit from buying certain tools with us compared to the major top brands and does not necessarily mean to cover all categories of tools offered by us. You are kindly reminded to verify carefully when you are placing an order with us if you are actually saving half in comparison with the top major brands.

VEVOR®
TOUGH TOOLS, HALF PRICE

MANUAL RING EXPANDER

MODELLO: IL KD-101

(L'immagine è solo di riferimento, fare riferimento all'oggetto reale)

NEED HELP? CONTACT US!

Have product questions? Need technical support? Please feel free to contact us:

Technical Support and E-Warranty Certificate
www.vevor.com/support

This is the original instruction, please read all manual instructions carefully before operating. VEVOR reserves a clear interpretation of our user manual. The appearance of the product shall be subject to the product you received. Please forgive us that we won't inform you again if there are any technology or software updates on our product.

SAFETY INSTRUCTION AND PRECAUTIONS

AVVERTIMENTO:

Leggere questo materiale prima di utilizzare questo prodotto. La mancata osservanza di questa precauzione può causare gravi lesioni.

1. Questo prodotto non è un giocattolo. Non permettere ai bambini di giocare con questo articolo.
2. Utilizzare solo come previsto.
3. Fissare la macchina al tavolo prima dell'uso.

NAME OF PARTS

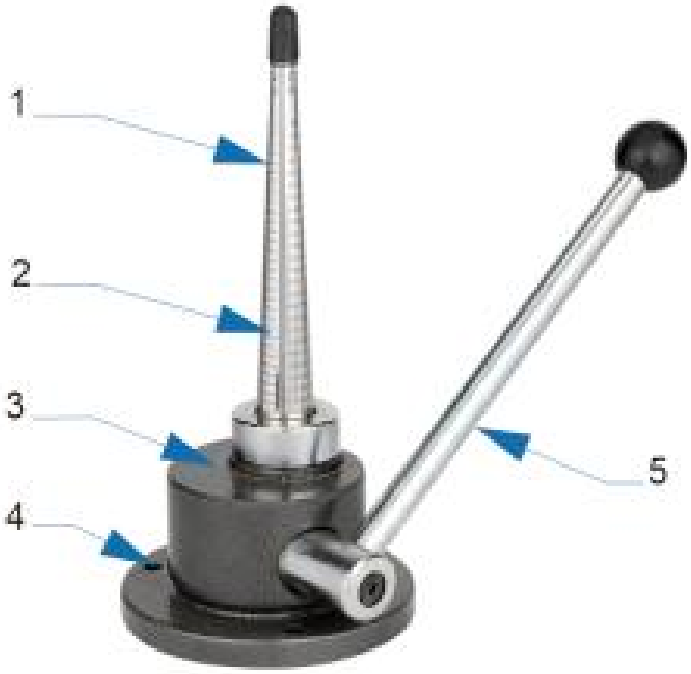

1. Lame 2. Barra di espansione 3. Base 4. Foro fisso 5. Leva manuale

HOLE CLASS

Europa, America, Giappone e Hong Kong 4 taglie

OPERATION AS BELOW

1. Il funzionamento è semplice: premere la barra di espansione per espandere.

2. La scala è chiara e leggibile .

3. La base è fissata con tre fori ed è comodo espandere la forza dopo aver fissato l'anello .

	Elementi	Descrizione
1	Nome	Espansore ad anello manuale
2	Modello	Il KD-101
3	Parametro	Gamma regolabile del foro per le dita CU : 41-71 , US : 1-14 , No. : 1-31 , HK : 8-32

VEVOR®

TOUGH TOOLS, HALF PRICE

Supporto tecnico e certificato di garanzia elettronica

www.vevor.com/support