VEVOR

Affordable. Reliable. Home Improvement.

LAKE WEED CUTTER-ROPE

MODEL:7847

Technical Support and E-Warranty Certificate

www.vevor.com/support

VEVOR

Affordable. Reliable. Home Improvement.

LAKE WEED CUTTER-ROPE

MODEL: 7847

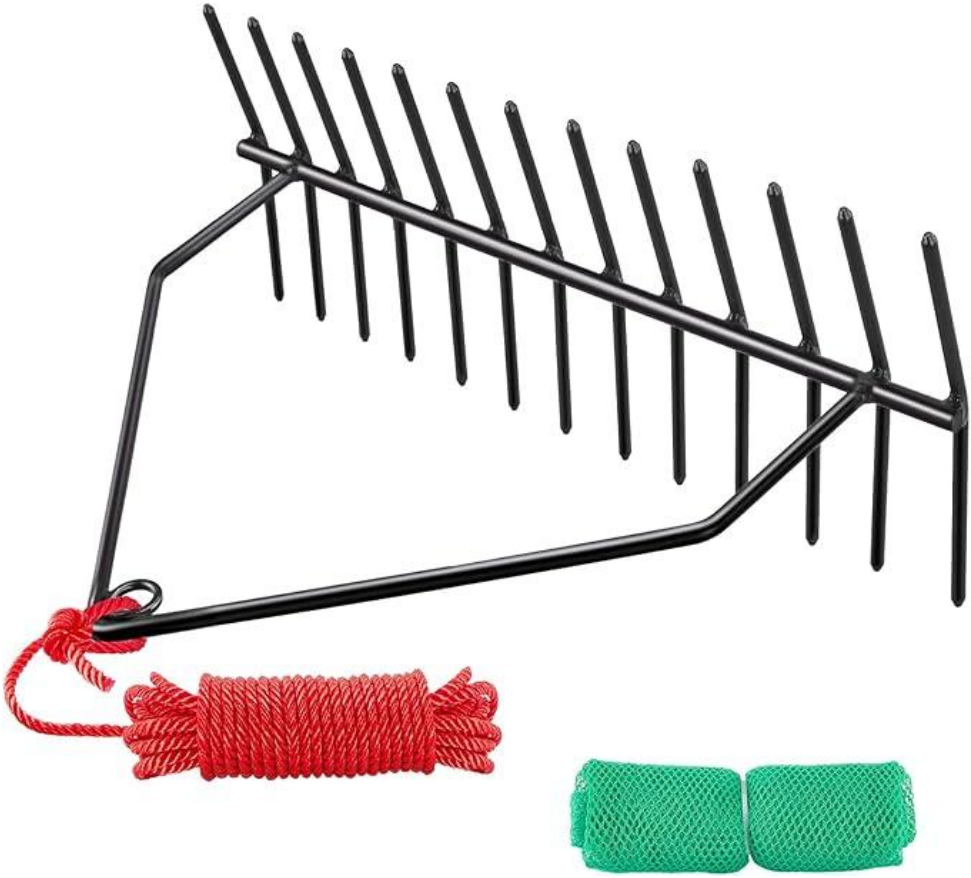

This is the original instruction, please read all manual instructions carefully before operating. VEVOR reserves a clear interpretation of our user manual. The appearance of the product shall be subject to the product you received. Please forgive us that we won't inform you again if there are any technology or software updates on our product.

PARTS LIST

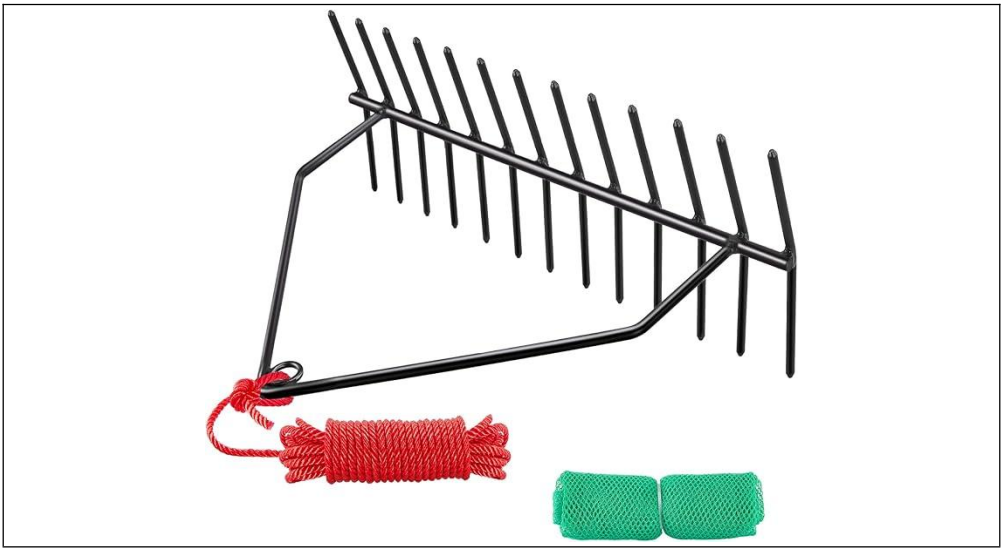

Modle: 7847

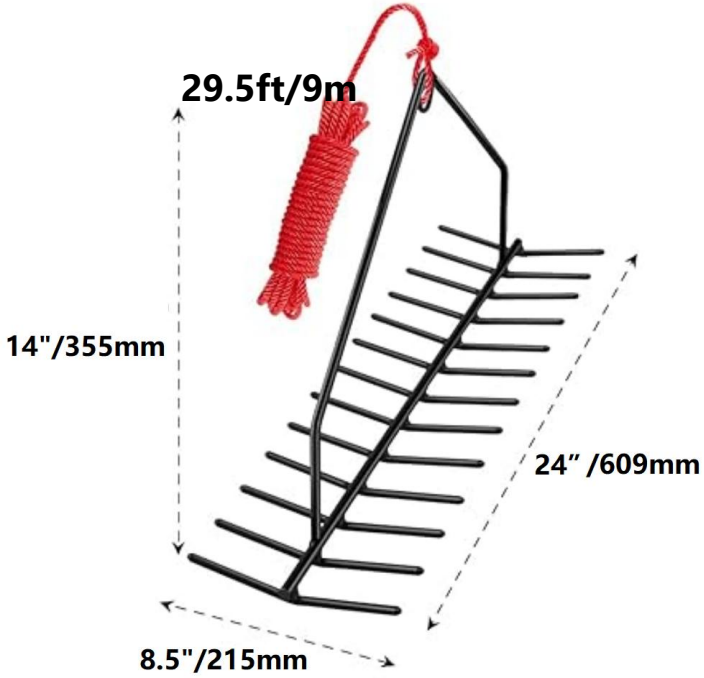

VERY
EASY TO
THROW FOR
A LONG DISTANCE

NO ASSEMBLY REQUIRED
ONE-PIECE WELDING

Manufacturer:Shanghaimuxinmuyeyouxiangongsi
Address:Shuangchenglu803nong11hao1602A-1609shi,baoshanqu,
shanghai200000CN.
ECREP:E-CrossStuGmbH.
MainzerLandstr.69,60329FrankfurtamMain.
UKREP:YHCONSULTINGLIMITED.
C/OYHConsultingLimitedOffice147,CenturionHouse,LondonRoad,
Staines-upon-Thames,Surrey,TW184AX
ImportedtoAUS:SIHAOPTYLTD.
1ROKEVASTREETEASTWOODNSW2122Australia
ImportedtoUSA:SanvenTechnologyLtd.
Suite250,9166AnaheimPlace,RanchoCucamonga,CA91730

Technical Support and E-Warranty Certificate
www.vevor.com/support

Machine Translated by Google

VEVOR

Affordable. Reliable. Home Improvement.

TAGLIAERBA PER LAGO-CORDA

MODELLO:7847

Supporto tecnico e certificato di garanzia elettronica www.vevor.com/support

Machine Translated by Google

Machine Translated by Google

VEVOR
Affordable. Reliable. Home Improvement.

ALGHE DI LAGO TAGLIERINA-FUNE

MODELLO: 7847

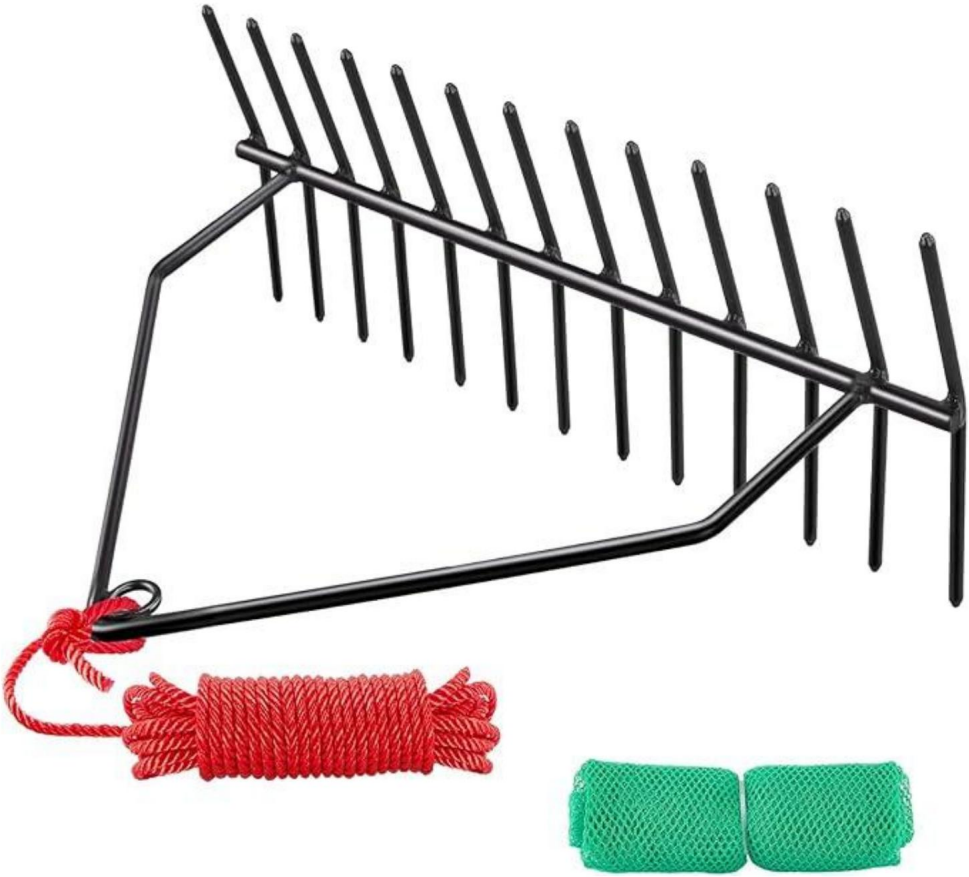

Questa è l'istruzione originale, si prega di leggere attentamente tutte le istruzioni del manuale prima di utilizzare. VEVOR si riserva una chiara interpretazione del nostro manuale utente. L'aspetto del prodotto sarà soggetto al prodotto ricevuto. Vi preghiamo di perdonarci se non vi informeremo di nuovo se ci sono aggiornamenti tecnologici o software sul nostro prodotto.

Machine Translated by Google

ELENCO DELLE PARTI

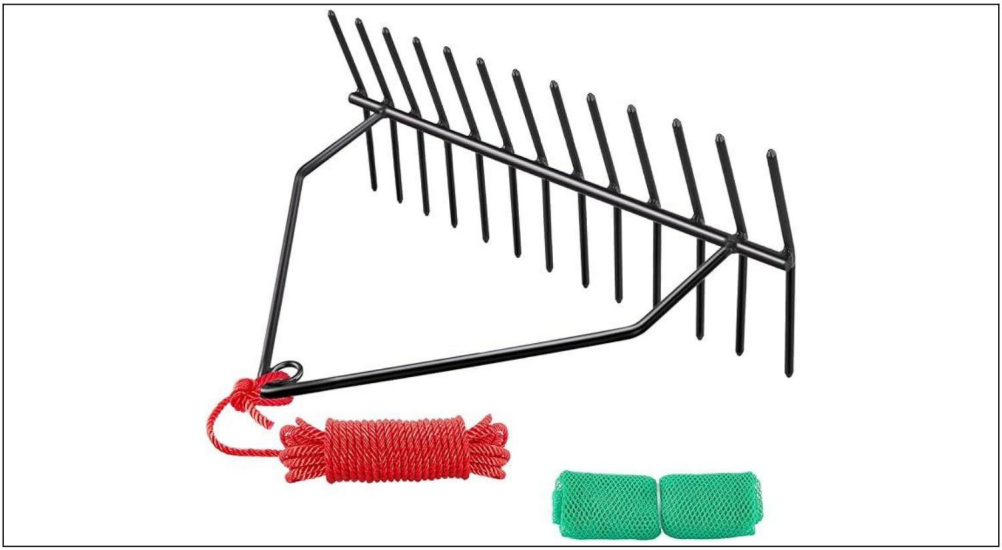

Modle: 7847

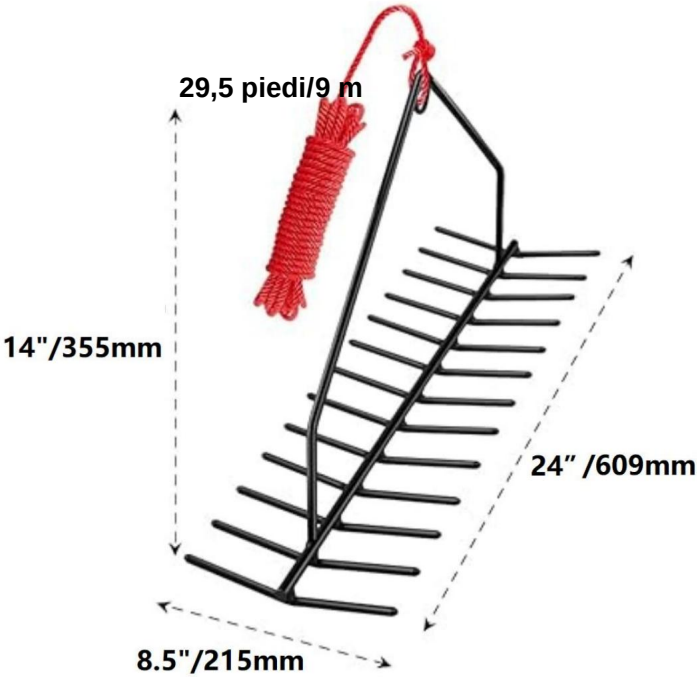

Machine Translated by Google

Machine Translated by Google

Produttore: Shanghaimuxinmuyeyouxiangongsi

Indirizzo: Shuangchenglu803nong11hao1602A-1609shi,baoshanqu,

shanghai200000CN.

ECREP:E-CrossStuGmbH.

MainzerLandstr.69,60329FrancoforteMain.

UKREP:YHCONSULTINGLIMITED.

C/OYHConsultingLimitedUfficio147,CenturionHouse,LondonRoad,

Staines-upon-Thames,Surrey,TW184AX

Importato in AUS:SIHAOPTYLTD.

1ROKEVASTREETWOODNSW2122Australia

Importato negli Stati Uniti: SanvenTechnologyLtd.

Suite250,9166AnaheimPlace,RanchoCucamonga,CA91730

Machine Translated by Google

Machine Translated by Google

Supporto tecnico e certificato di garanzia elettronica www.vevor.com/support

Machine Translated by Google

VEVOR

Affordable. Reliable. Home Improvement.

LAKE WEED CUTTER-LINA DO CIĘCIA WODOSPADÓW

MODEL:7847

Wsparcie techniczne i certyfikat gwarancji elektronicznej www.vevor.com/support

Machine Translated by Google

Machine Translated by Google

VEVOR
Affordable. Reliable. Home Improvement.

WODOSPADY JEZIORNE

PRZECINARKA-LINA

MODEL: 7847

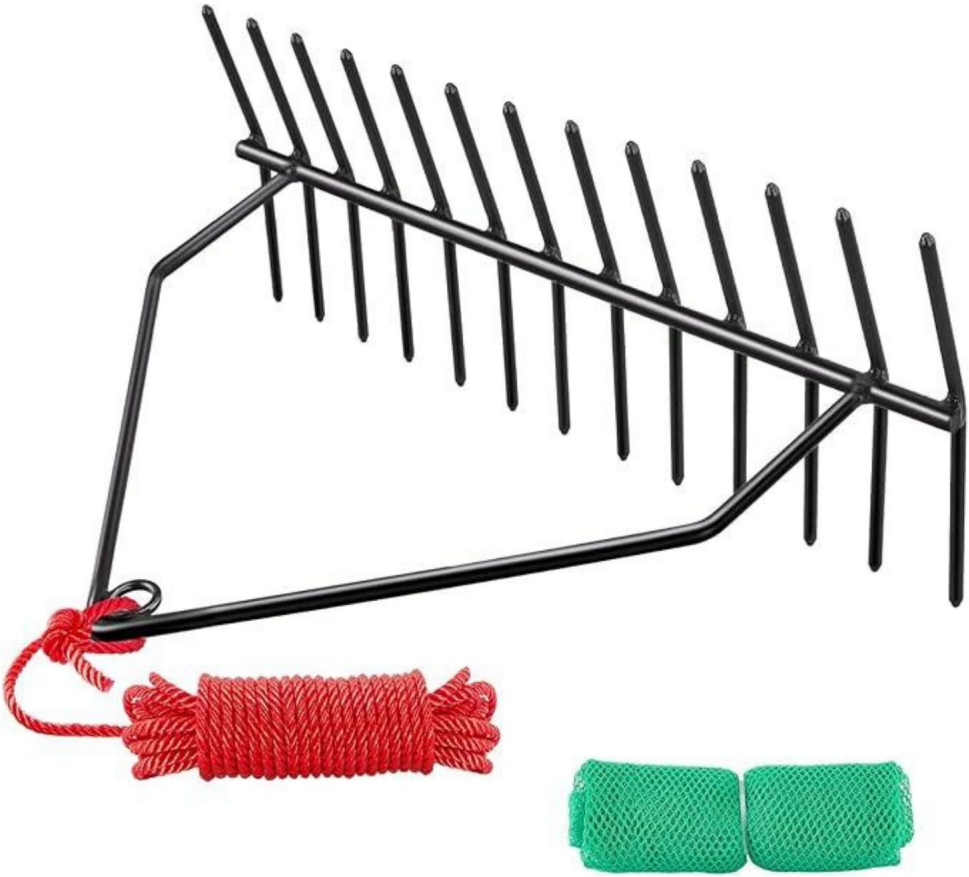

To jest oryginalna instrukcja, przed użyciem należy uważnie przeczytać wszystkie instrukcje. VEVOR zastrzega sobie jasną interpretację naszej instrukcji obsługi. Wygląd produktu będzie zależał od produktu, który otrzymałeś. Prosimy o wybaczenie, że nie poinformujemy Cię ponownie, jeśli w naszym produkcie pojawią się jakiekolwiek aktualizacje technologiczne lub oprogramowania.

Machine Translated by Google

LISTA CZĘŚCI

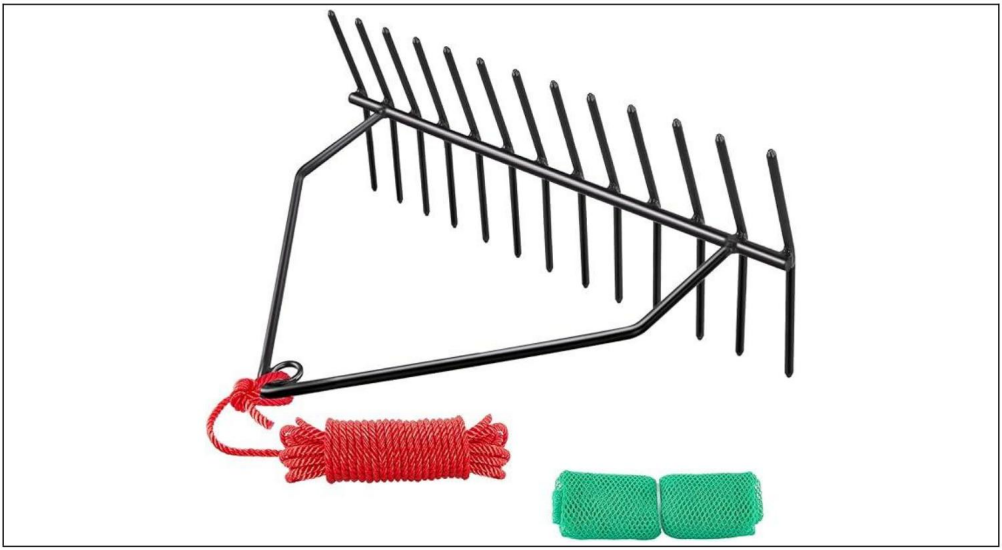

Modle: 7847

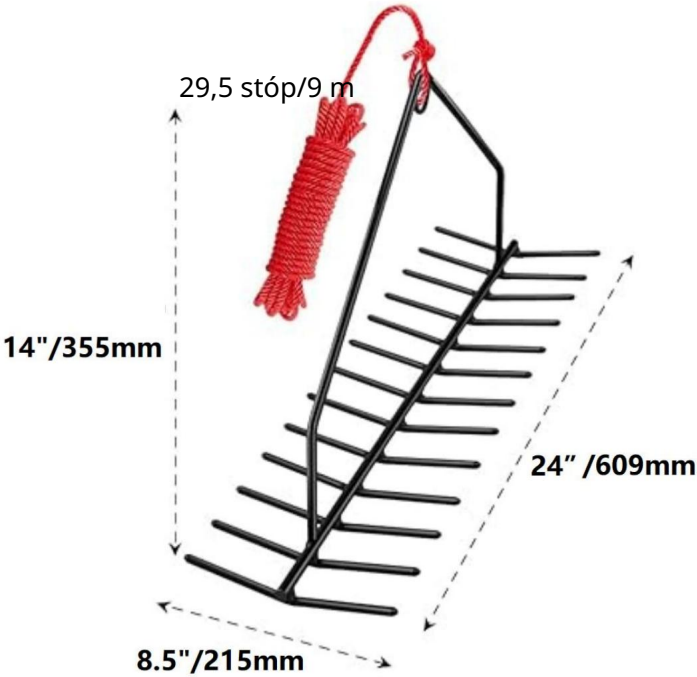

Machine Translated by Google

Machine Translated by Google

Producent:Shanghaimuxinmuyeyouxiangongsi

Adres:Shuangchenglu803nong11hao1602A-1609shi,baoshanqu,

szanghaj200000CN.

ECREP:E-CrossStuGmbH.

MainzerLandstr.69,60329FrankfurtamMain.

UKREP:YHCONSULTINGLIMITED.

C/OYHConsultingLimitedOffice147,CenturionHouse,LondonRoad, Staines-

upon-Thames,Surrey,TW184AX

Importowane doAUS:SIHAOPTYLTD.

1ROKEVASTREETEASTWOODNSW2122Australia

Import do USA: SanvenTechnology Ltd.

Suite250,9166AnaheimPlace,RanchoCucamonga,CA91730

Machine Translated by Google

Machine Translated by Google

Wsparcie techniczne i certyfikat gwarancji elektronicznej www.vevor.com/support

Machine Translated by Google

VEVOR

Affordable. Reliable. Home Improvement.

Seegrasschneider-Seil

MODELL:7847

Technischer Support und E-Garantie-Zertifikat

www.vevor.com/support

Machine Translated by Google

Machine Translated by Google

VEVOR
Affordable. Reliable. Home Improvement.

Seegras Schneideseil

MODELL: 7847

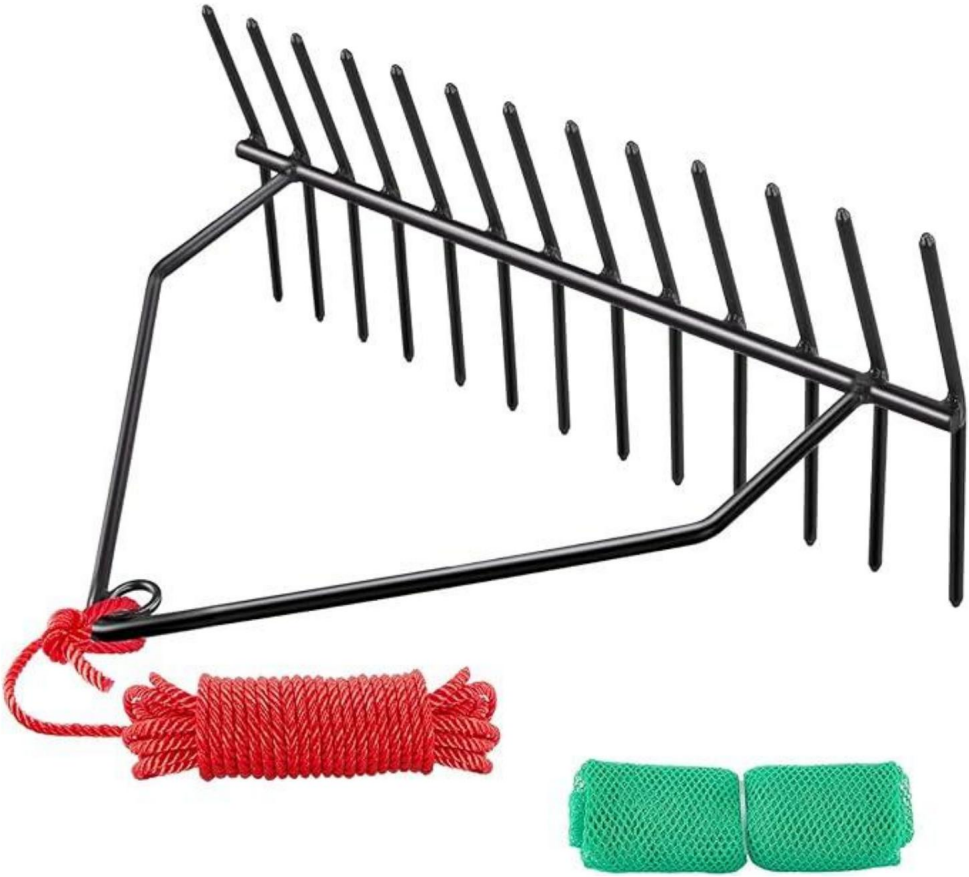

Dies ist die Originalanleitung. Bitte lesen Sie alle Anweisungen sorgfältig durch, bevor Sie das Gerät in Betrieb nehmen. VEVOR behält sich das Recht vor, die Bedienungsanleitung klar und deutlich zu interpretieren. Das Aussehen des Produkts hängt vom gelieferten Produkt ab. Bitte haben Sie Verständnis dafür, dass wir Sie nicht erneut über Technologie- oder Software-Updates informieren.

Machine Translated by Google

TEILELISTE

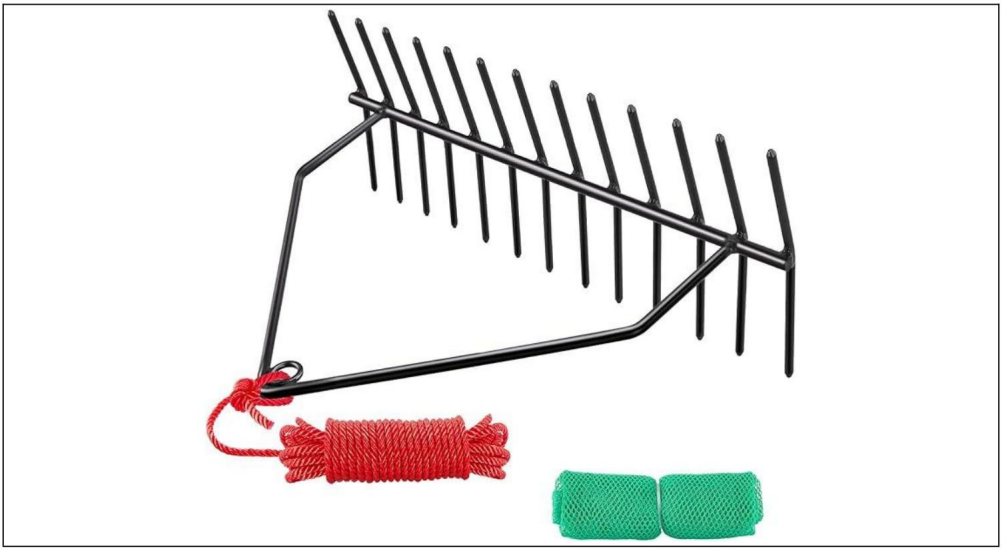

Modle: 7847

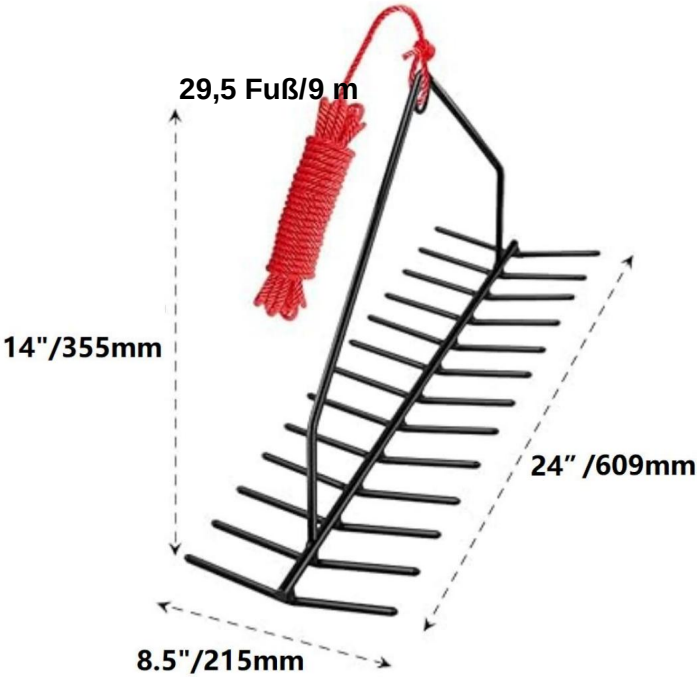

Machine Translated by Google

Machine Translated by Google

Hersteller: Shanghaimuxinmuyeyouxiangongsi

Adresse: Shuangchenglu803nong11hao1602A-1609shi, baoshanqu,

shanghai200000CN.

ECREP:E-CrossStuGmbH.

MainzerLandstr.69,60329FrankfurtMain.

UKREP:YHCONSULTINGLIMITED.

C/OYHConsultingLimitedOffice147,CenturionHouse,LondonRoad, Staines-

upon-Thames,Surrey,TW184AX

Nach AUS importiert: SIHAOPTYLTD.

1ROKEVASTREETEASTWOODNSW2122Australien

Importiert in die USA: SanvenTechnologyLtd.

Suite250,9166AnaheimPlace,RanchoCucamonga,CA91730

Machine Translated by Google

Machine Translated by Google

Technischer Support und E-Garantie-Zertifikat
www.vevor.com/support

Machine Translated by Google

VEVOR

Affordable. Reliable. Home Improvement.

CORDE COUPE-HERBES DU LAC

MODÈLE : 7847

Assistance technique et certificat de garantie électronique www.vevor.com/support

Machine Translated by Google

Machine Translated by Google

VEVOR
Affordable. Reliable. Home Improvement.

algues du lac
COUPE-CORDE

MODÈLE : 7847

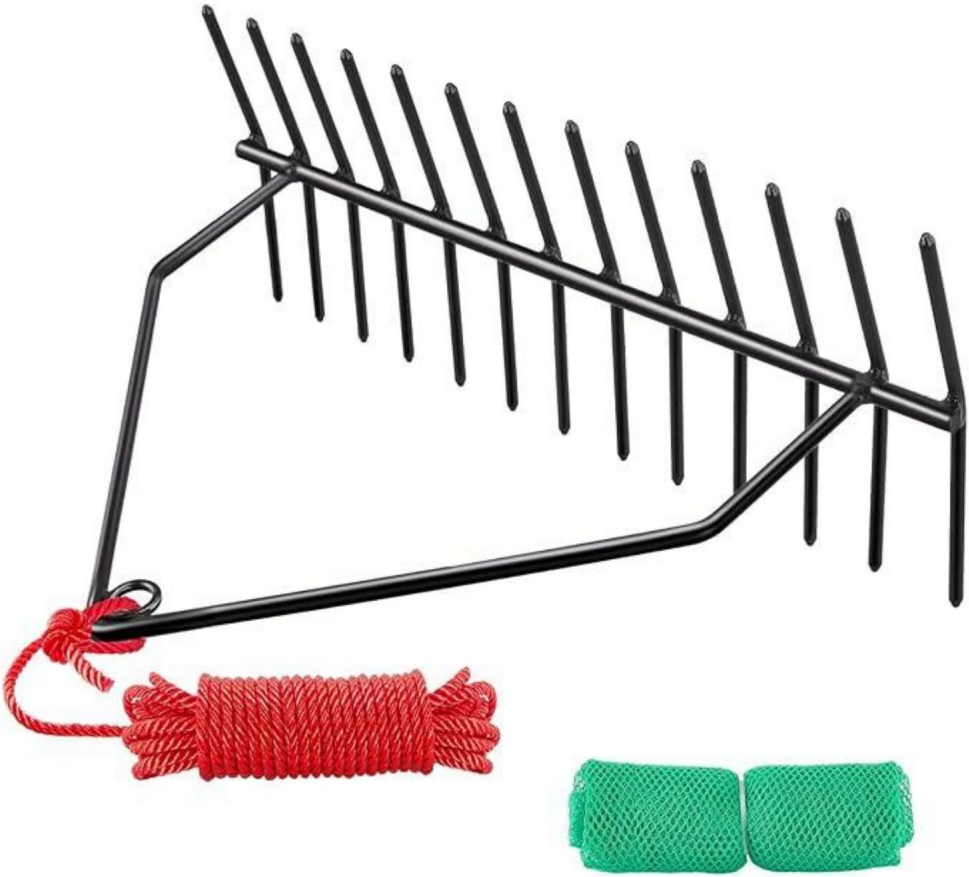

Ceci est le mode d'emploi d'origine. Veuillez lire attentivement l'intégralité du manuel avant utilisation. VEVOR se réserve le droit d'interpréter clairement ce manuel d'utilisation. L'apparence du produit dépend du produit que vous avez reçu. Veuillez nous excuser pour les éventuelles mises à jour technologiques ou logicielles.

Machine Translated by Google

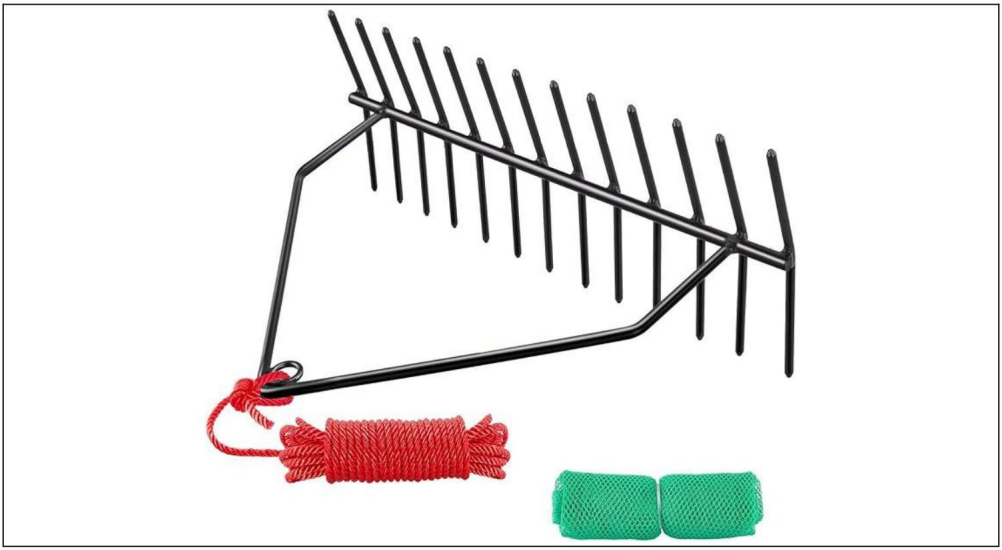

Modle: 7847

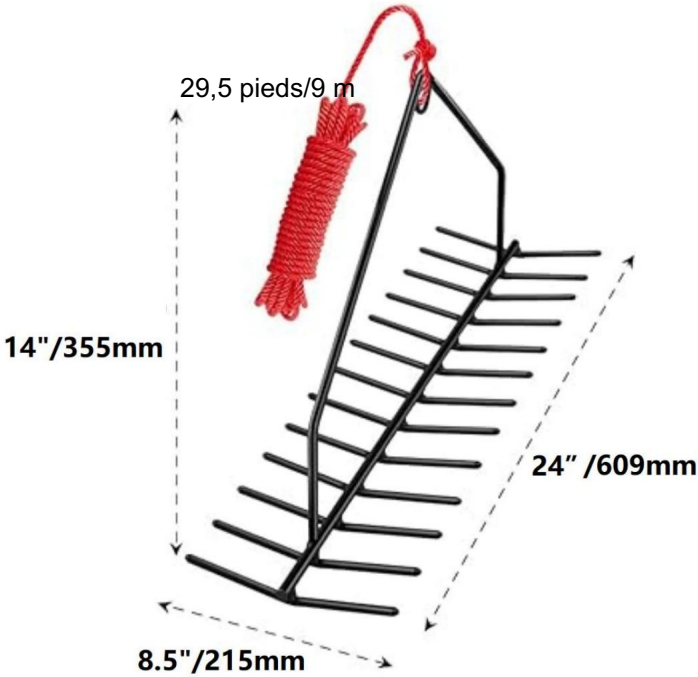

Machine Translated by Google

Machine Translated by Google

Fabricant:Shanghaimuxinmuyeyouxiangongsi

Adresse : Shuangchenglu803nong11hao1602A-1609shi,baoshanqu,

shanghai200000CN.

ECREP : E-CrossStuGmbH.

MainzerLandstr.69,60329FrancfortMain.

UKREP : YHCONSULTINGLIMITED.

C/OYHConsultingLimited, bureau 147, Centurion House, London Road, Staines-

upon-Thames, Surrey, TW184AX

Importé vers AUS:SIHAOPTYLTD.

1ROKEVASTREETEASTWOODNSW2122Australie

Importé aux États-Unis : SanvenTechnologyLtd.

Suite 250, 9166 Anaheim Place, Rancho Cucamonga, CA 91730

Machine Translated by Google

Machine Translated by Google

Assistance technique et certificat de garantie
électronique www.vevor.com/support

Machine Translated by Google

VEVOR

Affordable. Reliable. Home Improvement.

MEERWIETWEEDIMMACHINE-TOUW

MODEL:7847

Technische ondersteuning en e-garantiecertificaat

www.vevor.com/support

Machine Translated by Google

Machine Translated by Google

VEVOR
Affordable. Reliable. Home Improvement.

MEERWIETEN SNIJDRAAD

MODEL: 7847

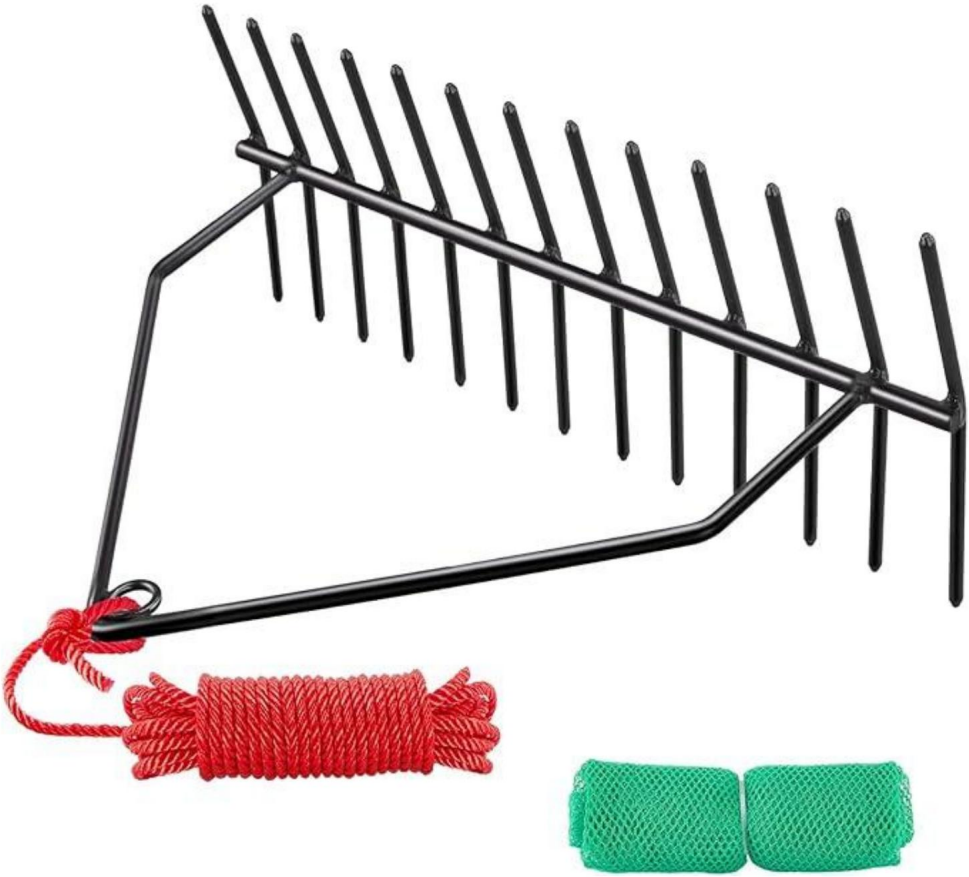

Dit is de originele instructie, lees alle handleidingen zorgvuldig door voordat u het product gebruikt. VEVOR behoudt zich een duidelijke interpretatie van onze gebruikershandleiding voor. Het uiterlijk van het product is afhankelijk van het product dat u hebt ontvangen. Vergeef ons dat we u niet opnieuw zullen informeren als er technologie- of software-updates voor ons product zijn.

Machine Translated by Google

ONDERDELENLIJST

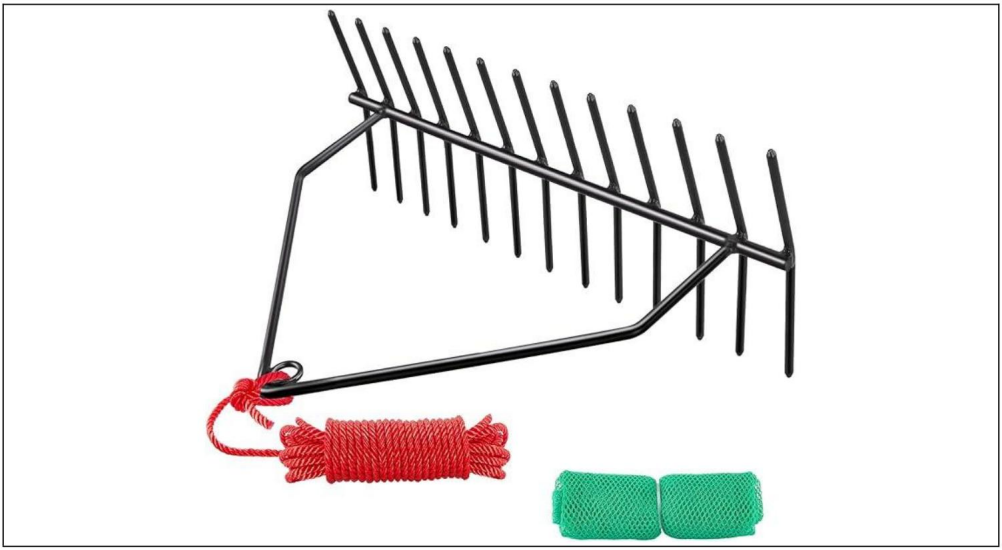

Modle: 7847

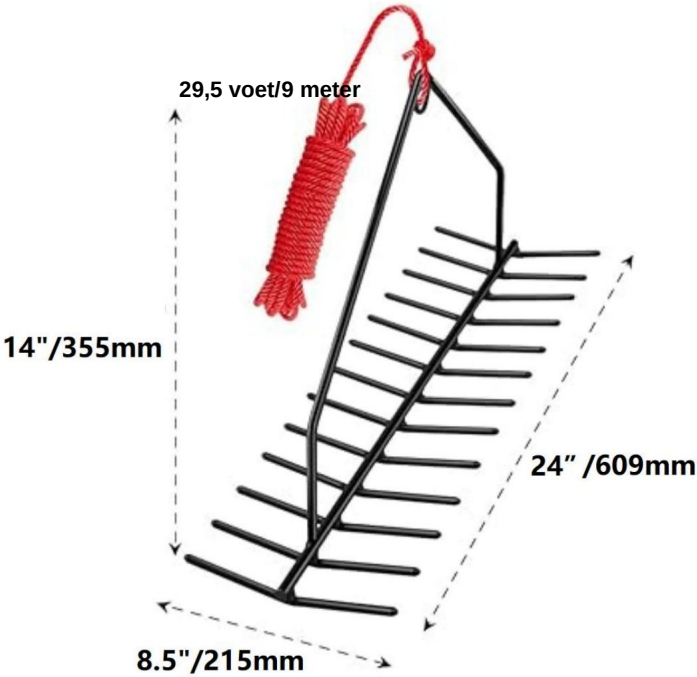

Machine Translated by Google

Machine Translated by Google

Fabrikant: Shanghaiimuxinmuyeyouxiangongsi

Adres:Shuangchenglu803nong11hao1602A-1609shi,baoshanqu,

shanghai200000CN.

ECREP:E-CrossStuGmbH.

MainzerLandstr.69,60329FrankfurtamMain.

UKREP:YHCONSULTINGLIMITED.

C/OYHConsultingLimitedKantoor147,CenturionHouse,LondonRoad,

Staines-upon-Thames,Surrey,TW184AX

Geïmporteerd naar AUS: SIHAOPTYLTD.

1ROKEVASTREETEASTWOODNSW2122Australië

Geïmporteerd naar de VS: SanvenTechnology Ltd.

Suite250,9166AnaheimPlace,RanchoCucamonga,CA91730

Machine Translated by Google

Machine Translated by Google

Technische ondersteuning en e-garantiecertificaat www.vevor.com/support

Machine Translated by Google

VEVOR

Affordable. Reliable. Home Improvement.

LAKE WEED CUTTER-REP

MODELL: 7847

Teknisk support och e-garanticertifikat

www.vevor.com/support

Machine Translated by Google

Machine Translated by Google

VEVOR
Affordable. Reliable. Home Improvement.

LAKE WEED KLIPPARE

MODELL: 7847

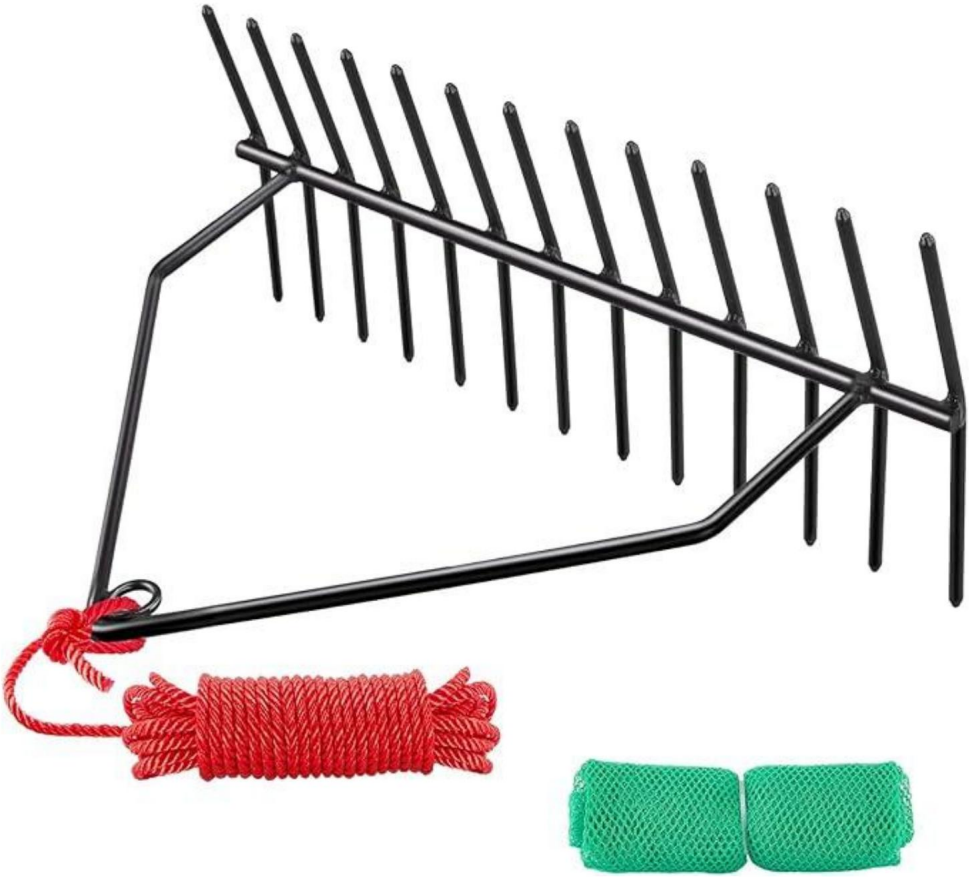

Detta är den ursprungliga instruktionen, läs alla instruktioner noggrant innan du använder den. VEVOR reserverar sig för en tydlig tolkning av vår användarmanual. Utseendet på produkten är beroende av den produkt du fått. Ursäkta oss att vi inte kommer att informera dig igen om det finns någon teknik eller mjukvaruuppdateringar på vår produkt.

Machine Translated by Google

DELLISTA

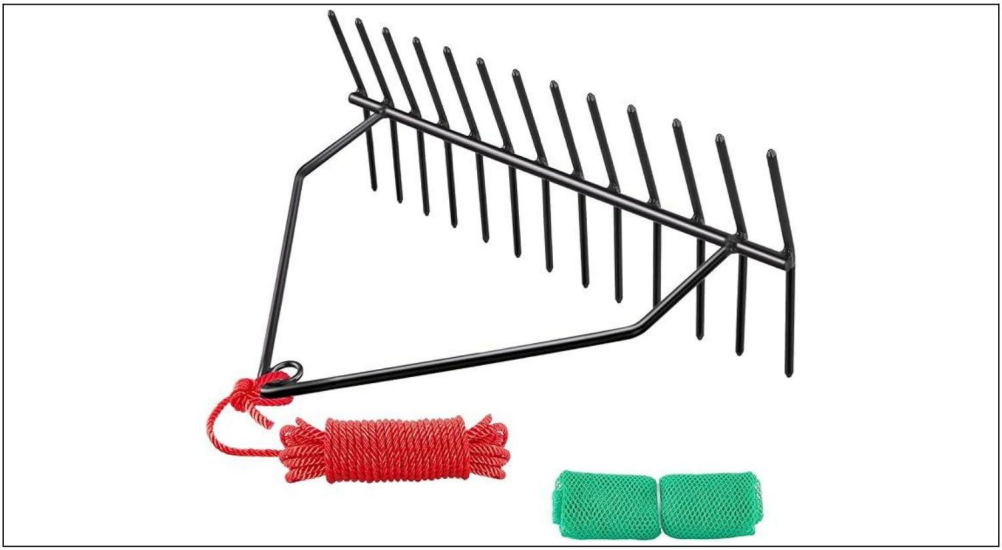

Modle: 7847

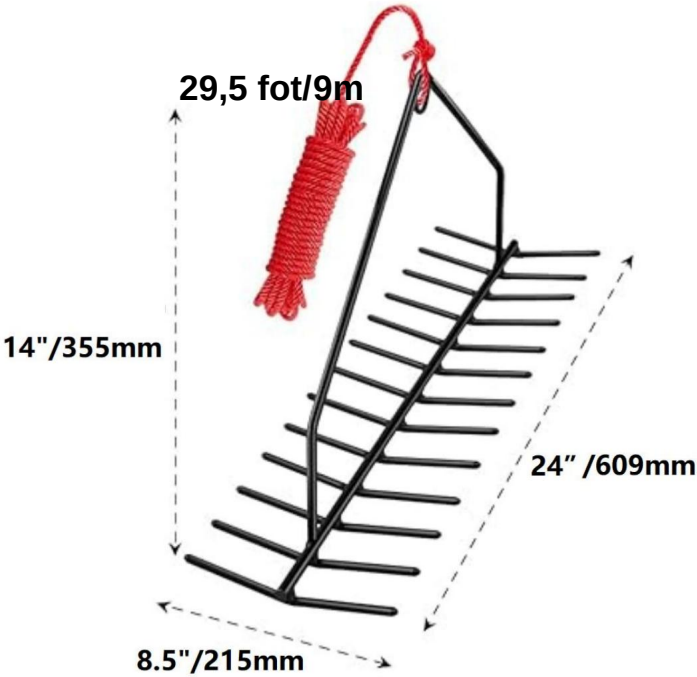

Machine Translated by Google

Machine Translated by Google

Tillverkare:Shanghaimuxinmuyeyouxiangongsi

Adress: Shuangchenglu803nong11hao1602A-1609shi,baoshanqu,
shanghai200000CN.

ECREP:E-CrossStuGmbH.

MainzerLandstr.69,60329FrankfurtamMain.

UKREP:YHCONSULTINGLIMITED.

C/OYHConsultingLimitedOffice147,CenturionHouse,LondonRoad, Staines-
upon-Thames,Surrey,TW184AX

Importerad till AUS:SIHAOPTYLTD.
1ROKEVASTREETEASTWOODNSW2122Australien

Importerad till USA: SanvenTechnologyLtd.

Suite250,9166AnaheimPlace,RanchoCucamonga,CA91730

Machine Translated by Google

Machine Translated by Google

Teknisk support och e-garanticertifikat
www.vevor.com/support

Machine Translated by Google

VEVOR

Affordable. Reliable. Home Improvement.

CORTADORA DE MALEZAS DE LAGO - CUERDA

MODELO:7847

Soporte técnico y certificado de garantía electrónica www.vevor.com/support

Machine Translated by Google

Machine Translated by Google

VEVOR
Affordable. Reliable. Home Improvement.

HIERBA DEL LAGO CUERDA CORTADORA

MODELO: 7847

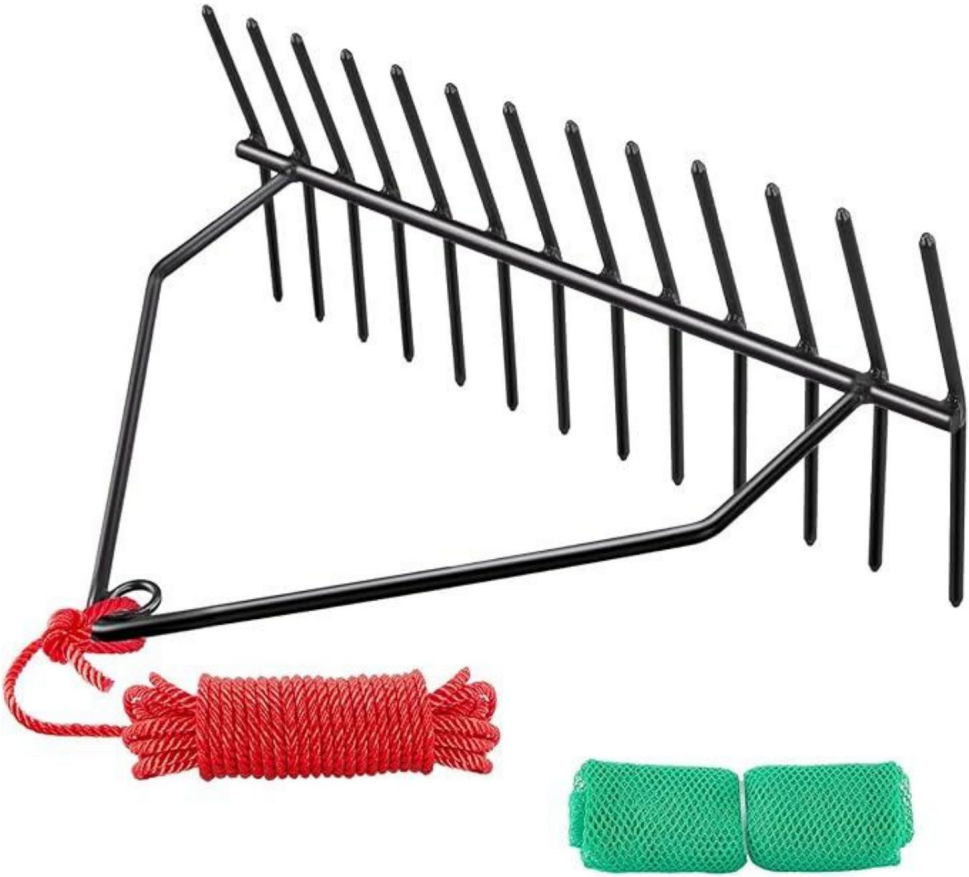

Estas son las instrucciones originales; lea atentamente todas las instrucciones del manual antes de utilizarlo. VEVOR se reserva el derecho de interpretar su manual de usuario. La apariencia del producto dependerá del producto que haya recibido. Le rogamos que no le informemos si hay actualizaciones tecnológicas o de software en nuestro producto.

Machine Translated by Google

LISTA DE PIEZAS

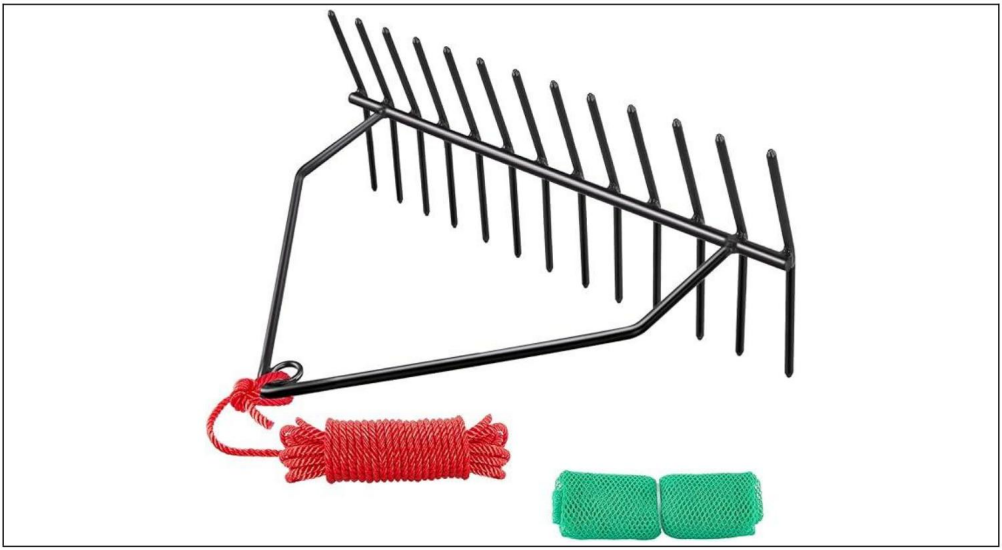

Modle: 7847

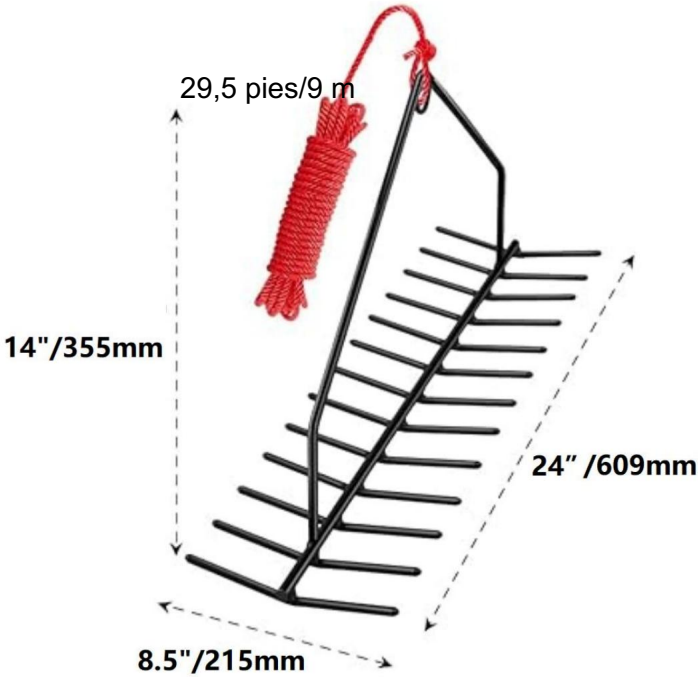

Machine Translated by Google

Machine Translated by Google

Fabricante: Shanghaimuxinmuyeyouxiangongsi

Dirección: Shuangchenglu803nong11hao1602A-1609shi,baoshanqu,

shanghai200000CN.

ECREP:E-CrossStuGmbH.

MainzerLandstr.69,60329FrankfurtamMain.

REP. DEL REINO UNIDO: YHCONSULTINGLIMITED.

Oficina C/OYH Consulting Limited, 147, Centurion House, London Road,

Staines-upon-Thames, Surrey, TW184AX

Importado a AUS: SIHAOPTYLTD.

1ROKEVASTREET, EASTWOOD, NSW 2122, Australia

Importado a EE. UU.: Sanven Technology Ltd.

Suite 250, 9166 Anaheim Place, Rancho Cucamonga, CA 91730

Machine Translated by Google

Machine Translated by Google

Soporte técnico y certificado de garantía
electrónica www.vevor.com/support